Mayor
Ken Sunseri

City Clerk
Christy Harbin

City of Haleyville

911 21st Avenue Haleyville, AL 35565
Phone (205)486-3121 · Fax (205)486-9048

Councilmembers
Dr. Ray Boshell
Brian Berry
Julie "Boo" Brooks
Blue Russell
Drew Thrasher

September 7th, 2022

RECEIVED
SEP 12 2022
COMMUNITY SVCS 10:02am

Mr. Kenneth Boswell
Director
Alabama Department of Economic and Community Affairs
401 Adams Avenue
P.O. Box 5690
Montgomery, AL 36103-5690

Dear Mr. Boswell,

On behalf of the City of Haleyville, please accept the enclosed application for the Recreational Trails Program (RTP) for improvements to Rocky Ravine Park. The park is a true hidden gem in North Alabama. Unfortunately, it has been closed for several years due to unsafe walkways on the original section of the park's trail. It is a valuable piece of the city's civic history and recreational history. Because of the natural spring that feeds into the city lake, the park previously housed water and pump stations in the early part of the 20th century. Remnants of these stone structures as well as infrastructure – such as stone handrails – can still be seen along the trail today. Improvements to the trail are vital in order to reopen the trail and give the citizens of Haleyville more opportunities for outdoor recreation. These updates will provide a valuable recreational resource to both the residents of Haleyville and the surrounding area. The proposed application for $252,598.50 will allow the city to rehab and reopen this trail.

Thank you for the opportunity to see assistance for this important project. Should any question arise, please feel free to contact Christy Harbin for the City of Haleyville at 205-486-3121 or email at charbin@cityofhaleyville.com. Your consideration is greatly appreciated.

Sincerely,

Ken Sunseri

Ken Sunseri
Mayor, City of Haleyville

APPLICATION CHECKLIST

Please use this checklist to ensure all required application documents are included prior to submitting to ADECA. **Incomplete applications will not be processed.**

Letter on entity letterhead signed by the Chief Elected Official	X
Application Cover Sheet (Page 9)	X
Resolution adopted by the applicant authorizing the submission of the application and committing all matching funds required to complete the proposed project	X
A narrative description of the proposed project and responses to each of the application rating criterion (Pages 10-13)	X
Project Cost Estimate (Page 14)	X
Detailed project budget with descriptive narrative	X
Schedule of project activities necessary for project completion to include measurable milestones (18-month period beginning March 2022)	X
Preliminary site plan	X
Location/vicinity map	X
Property boundary area map	X
Verification of SAM.gov registration	X
Environmental Assessment:	X
Concurrence from the U.S. Army Corps of Engineers	X
Concurrence from the U.S. Wish and Wildlife Service	X
Concurrence from the Alabama Historical Commission	X
Approval to cross a public highway or a public utility right-of-way (if applicable)	X
Water obstruction & encroachment permit (if applicable)	X
Hazardous materials survey if real property is to be acquired with grant funds	X
Environmental Assessment (if applicable)	X
Copy of deed to property, plat, and/or legal description of the property proposed for purchase and/or development **NOTE:** If real property is to be acquired with grant funds, the acquisition must comply with the Uniform Relocation Assistance and Real Property Acquisition Policies Act of 1970 (The Uniform Act). Implementation regulations for The Uniform Act are found in 49 CFR Part 24. **You may not acquire property through donation or purchase until after the grant agreement has been executed and consultation with ADECA staff has occurred.**	X
Signed statement from landowner expressing support (This is applicable if the applicant and landowner are **not** the same. **A recorded easement allowing trail construction will be required from the landowner before construction begins.**)	N/A
Environmental Screening Form and Environmental Checklist (Pages 15-19)	X
Letters of endorsement, support, and commitment; other documentation of citizen participation and public comment period	X

You must include a copy of this completed checklist with your application. Please see the following website for electronic versions of the forms: https://adeca.alabama.gov/trails/rtp-information-and-application-documents/.

Application Cover Sheet

Applicant's Name (Organization): City of Haleyville, Alabama

Address: 911 21st Street

Haleyville, Alabama 35565-1425

County: Winston

FEI Number: 63-6001289

DUNS Number: 102077096

Unique Entity Identifier (UEI): SR79CB1HLMM7

Project Title: Trails Improvement Project – Rocky Ravine Park

Project Description:

Park Name, if applicable: Rocky Ravine Park

Park (project location) Address: 2001 21st Street

Haleyville, Alabama 35565-0000

Latitude and Longitude (deg/min/sec): 34° 13' 39.2124" / -87° 37' 4.4004"

Congressional District (for project location): Fourth (4)

State Senate District (for project location): Fourth (4)

State House District (for project location): Seven (7)

Applicant Contact Person and Title: Ken Sunseri, Mayor

Phone Number: (205) 486-3121 office / (205) 269-7550 cell

Email Address: haleyvillemayor@cityofhaleyville.com

Grant Administrator or Other Contact, Title, and Organization: Calvin Cassady, P.E., City Engineer, The Cassady Company, Inc.

Phone Number: (205) 330-0098 office / (205) 292-2671 cell

Email Address: calvin@thecassadyco.com

RESOLUTION #2022-41

WHEREAS the City of Haleyville proposes to make improvements to the Rocky Ravine Park Trail that will benefit local citizens, and

WHEREAS the City of Haleyville, Alabama intends to apply for funding of $252,598.50 through the Recreational Trails Program Grant for the FY2023 Funding Cycle to improve the stairs and trail at Rocky Ravine Park, and

NOW, THEREFORE, BE IT RESOLVED by the City Council of the City of Haleyville, that the City of Haleyville, Alabama is authorized to submit an application to the Recreational Trails Program Grant for the FY2023 Funding Cycle for funding of $252,598.50 to improve the steps and trail at Rocky Ravine Park.

BE IT FURTHER RESOLVED that the application be submitted for and on behalf of the City of Haleyville by its Mayor, Ken Sunseri, who is authorized by this Resolution to sign the application and any related forms or documents on behalf of the City of Haleyville.

Adopted and approved this 6th day of September 2022.

ATTEST:

Christy Harbin
City Clerk

Ken Sunseri
Mayor

I, Christy Harbin, the undersigned City Clerk of the City of Haleyville, Alabama, hereby certify that the foregoing constitutes a true, correct, and complete resolution duly adopted by the City Council of the City of Haleyville, Alabama, at a meeting thereof held on this 6th day of September 2022, at which meeting a quorum was present and acting through out.

Witness my signature as City Clerk, under the Seal of said City, this 6th day of September 2022.

Christy Harbin
City Clerk

Project Descriptive Narrative

Provide a brief, yet informative, description of the proposed project and address each evaluation criterion on the following pages (provide additional information and documentation as may be needed to support your response to each evaluation criterion).

Project Information

Name of Project: Rocky Ravine Park

Trail Length in Linear Feet (L.F.): 12,450 Trail Width: 6 ft

Trail Surface Type: Wooden Boardwalk & natural earth.

Application Type:
- ☒ Non-motorized for a Single Use
- ☐ Non-motorized for Diverse Use
- ☐ Motorized
- ☐ Educational

Type of Applicant:
- ☒ City/Town
- ☐ State
- ☐ County
- ☐ Other

Total Estimated Project Cost	$	$252,598.50
Grant Amount Requested	$	$200,000.00
Total Local Match	$	$52,598.50
Cash Match	$	$52,598.50
In-Kind Match	$	$0
Donation	$	$0

Brief Description of the Project:

This project will consist of replacing stairs & wooden slats on original walkway leading into the ravine & installing slip resistant material to prevent falls. Walking bridges will also be replaced as well as handrails. New ADA Access points will be built as well as new trail construction.

Please address all evaluation criteria (100 Total Available Points).

1. **Describe the degree to which the project's scope and feasibility meet the project area's recreational needs.** (**Key Consideration:** Does the project appear to be feasible and incorporate a good project design with consideration given to the natural and cultural environment in which the project is located and appropriate consideration given to identified needs and project benefits?) **10 Points Available**

The City of Haleyville is the largest municipality in Winston County with a total population of 4,361 people. The city limits also overlap into Marion County. The city serves as a hub connecting both counties. Despite both counties shrinking in size during the last census, Haleyville grew in population by nearly 5%.

Rocky Ravine Park is located directly behind the Haleyville City Schools complex which includes the Elementary School, Middle School & High School. Several years

ago an outdoor classroom was built behind the high school. Rehabbing existing trail, and clearing ground for new trail will allow a connection to all 4 of these locations. This connectivity will encourage students to enjoy both the park and the city lake.

The park is centrally located in the community (less than 1 mile from the intersection at the center of town) and is within walking distance for residents of several residential and commercial areas of town. Much of the wood that was used in the construction of staircases & boardwalk into the ravine several decades ago has become rotten due to years of exposure to the elements. This caused the city to close down access to the ravine to the general public due to safety concerns until the wood can be replaced and made safe.

These improvements to the trail will ensure a recreational resource with a long history in the community will be used and enjoyed for years to come.

10 points.

---

2. **Describe the ways in which the project provides for the greatest number of compatible recreational purposes.** (**Key Consideration:** An important concern is that the project will enhance the quality and quantity of recreational trail opportunities available in the community or region. Points will be given to projects with connectivity to other trails and/or parks, environmental education and preservation, and economic development opportunities.) **10 Points Available**

The project will be used for pedestrian leisure and fitness activities for the community. The High School has a cross country team and a trail like this located directly behind the High School would be a tremendous asset. No motorized vehicles will be allowed on the trail. The improvements will provide a more stable and durable surface for trail users, which will facilitate increased use of the park.

The new trail will complete a loop from Rocky Ravine Park which will encompass the entire Haleyville City Lake. The lake is a recreational resource as well which allows non-motorized recreational boats & fishing.

9 points.

---

3. **Describe the ways in which the project provides a new, unique, or more effective means for making trail opportunities available to the public.** (**Key Consideration:** This criterion includes projects of national, regional, and local demonstration value. The most important concern is whether the grant recipient is committed to trying an approach that is new at the local level. Additional points are awarded for nationwide applicability and statewide or regional value. The applicant must commit to documenting the results of the demonstration and identify the method to be used in documenting the results.) **10 Points Available**

The trail is the only walking trail in Haleyville. The early history of Rocky Ravine Park is unknown, but it did serve as a source of municipal drinking water in the early part of the 20th century. The foundation of some of the structures that helped pump this water can still be seen today.

At some point after the city constructed new pump houses elsewhere, access points into the ravine were built to allow the general public to enjoy the benefits of this natural resource. On a normal summer day, the temperature can drop 15-20 degrees at the bottom of the ravine. In the 1970's many townspeople would pack food, hike to the bottom and enjoy their lunch in the natural air conditioning the ravine provided.

Parts of the trail were maintained over the years using materials that were innovative at the time, but these have subsequently been difficult to sustain. Over the years when exposed to the elements, the roofing paper that helped resist slipping in wet or humid weather has deteriorated to the point of no longer being helpful, making the boardwalk more difficult to walk on when moisture is present. As such, placing a more durable metal, weather resistant material on the boardwalk is strongly desired. The upgrades to the surface will provide continued opportunity for residents to take advantage of the health and recreation opportunities that the trail provides.

On the 2021 SCORP, Paved Walking/Jogging Trails ranked 3rd on the Regions Unmet Demands Index. And while not paved, the boardwalk that will make up a portion of the trail will provide a more stable walking surface than an unpaved trail can provide.

8 points

---

4. **Describe the ways in which the project facilitates the access and use of trails by persons with disabilities, older adults, economically disadvantaged, and other special populations or groups.** (**Key Consideration:** Whether the project will expand recreation opportunities for special populations with recreation deficiencies.) **10 Points Available**

The westernmost access point to the ravine is steep and unnavigable unless descending to the bottom via the staircase. The easternmost access point is flat and will be ADA compliant as it connects to the parking lot at the nearby city lake. In addition, handrails will be placed at key points along the trail where it may be harder to navigate for those with disabilities. The new wooden bridges that will traverse the stream will be wide and accommodating of wheelchairs.

In addition, the trail itself sits approximately ½ mile from 3 different Public Assisted Housing locations. These 3 housing locations form a triangle at which the westernmost entrance to Rocky Ravine Park sits almost in the exact center. Being centrally located to these 3 locations will be vital in encouraging economically disadvantaged populations to enjoy outdoor recreation.

9 points.

---

5. **Describe the ways in which the project creates opportunities for new partnerships between trail users, private interest groups, and public agencies within the project area.** (**Key Consideration:** The major concern is that the project is a component of an integrated effort to enhance economic revitalization and community conservation. Points will be given to applicants providing evidence of cooperative efforts with trail user groups and/or multiple public meetings.) **10 Points Available**

The project has support throughout the local community. In the last decade, Haleyville has shown a tremendous commitment to revitalize and grow it's downtown as well as take care of and rehab civic owned properties. The project is part of the town's overall efforts to improve the quality of life for it's citizens. Rocky Ravine Park has been closed down for over a decade because of the city's concern for safety. A public hearing held on held on September 6, 2022 produced no negative comments. Reopening and rehabbing this trail will play a key role in preserving a part of Haleyville's vibrant history as well as give residents access to outdoor recreation.

8 points.

---

6. **Describe the ways in which the project uses the grant funds to leverage other public or private investments (in the form of services and materials as well as dollars).** (**Key Consideration:** The major concern is whether actual leveraging is assured or the potential for leveraging is good, outside of any funds committed for the initial grant match. Points will be given for applicants committing double the minimum local match or higher. Supporting documentation must be included in the application.) **10 Points Available**

The City of Haleyville is obligating a total of $52,598.50 or 20.8% of the total project cost from local funds. This project has been desired since the trail was closed over a decade ago. The majority of the city is listed as low/moderate income, and the size of the total local commitment is demonstrative of the significance of the project to the town.

8 points.

---

7. **Describe the degree of commitment to continue operation and maintenance of the project. Include an operation and maintenance plan detailing the amount of money needed to operate and maintain the trail/facility after project completion and identify who will be responsible for these activities.** (**Key Consideration:** Whether the grant recipient is willing to commit to continue the maintenance and operation of the facilities and whether the applicant provides a realistic operation and maintenance plan/budget. Additional points will be awarded to applicants demonstrating innovative funding measures for trail maintenance.) **10 Points Available**

The City of Haleyville Parks & Recreation Department will maintain the trail. They have committed staff & personnel to walk the trail weekly in order to help maintain, clean and preserve it to a high standard. The operating budget for the park/trail will be addressed & updated yearly as needed.

10 points.

---

8. **The degree to which community involvement is addressed: i.e., (A) Project idea originated with trail users or a community group that has substantial knowledge, and (B) The private sector (including individual citizens, community groups, and/or local business enterprises) has participated in the development of the proposed idea and has made commitments of labor, money, or materials to support project implementation.** (**Key Consideration:** The objective is to determine if the project is responding to citizen-identified needs. The priority of the project to users is evidenced by citizen support for the idea. Points will be awarded to applicants demonstrating that the project concept was originally proposed at the grassroots level and, especially, for extensive citizen or private organization involvement in project development and support in project implementation as well as applicants demonstrating extensive involvement and participation from citizens and interest groups during all phases of application development and commitments beyond. Supporting documentation must be included in the application.) **10 Points Available**

(a) **The Rocky Ravine trail project is part of a larger effort to connect the city lake & city schools to other parts of the community. The Haleyville Sports Complex project was an FY2016 LWCF project which has had tremendous success in bringing different citizens of Haleyville as well as the surrounding area together to enjoy outdoor recreation. That project was a success because of widespread community support. That support has not waivered. After the FY2016 LWCF project, the town's recreational program has blossomed and residents have given overwhelming support to sustaining recreational amenities.**

(b) **At the public hearing held prior to the city council meeting on September 6th, no negative comments were voiced. The city council unanimously passed a resolution to pursue the RTP grant. A sign in sheet and letters of support are attached at the end of this application.**

9 points.

---

9. **Describe in detail how the trail will be managed. Include a discussion on season length, hours of operation, limitations on use, enforcement provisions, and scheduling. 10 Points Available**

The improvements will be overseen by staff of the City of Haleyville Parks & Recreation Department. This will include maintaining & clearing walkways and boardwalks. This also ensures that limbs or trees that may periodically fall will be cleaned and cleared from the trail as soon as possible. Landscaping on a regular

schedule will also ensure that the surface is kept in good repair in perpetuity. The Town parks operate during daylight hours, with some extended after hours activities allowed during baseball season. Security is provided by town police, and maintenance and management is provided by local staff.

The property already has a Limitation of Use in place from previous LWCF funds, so the trail and park will always be outdoor recreation based in nature.

10 points.

---

10. **Identify and describe the service area of the project. Approximately how many people do you propose to serve with this project? Identify other trail resources in the service area by trail type (motorized, non-motorized, multi-use), distance, location in relation to the proposed trail, and ownership. (Key Consideration:** The RTP was created to address trail needs in the urban and rural areas of the state. In order to assess the need for additional trails it is first necessary to identify the quantity and location of existing resources within the service area. It is also necessary to establish a service area – either population or resource based. For example, a population-based service area could be a neighborhood, school district, or political jurisdiction whereas, a resource-based service area might be defined along a linear greenway, water course, or unique natural/cultural area. However, in both instances, an estimate of the number of beneficiaries should be provided. Please identify how the project service area was determined.) **10 Points Available'**

Haleyville has a unique opportunity to provide recreational opportunities to multiple counties due to it's municipal limits extending into both Marion & Winston counties. The combined population of these two counties is 52,786. This is a largely rural area of the state and there are no trails that exist like the one at Rocky Ravine Park. The Sipsey Wilderness & Bankhead National Forest exist to the east of Haleyville, but the trails these places provide are typically used by more experienced overnight hikers & campers. The target group for this trail are those looking for day-use activities.

The service area consists mainly of the City of Haleyville, with a potential to attract those within a 15-30 minute drive of the city. The estimated population of this area is around 50,000 people.

Data from the 2020 Census shows that of the 14 municipalities that exist in Marion & Winston Counties, only 4 showed positive growth. Of those 4, Haleyville stood out as the only one that surpassed 4% growth. Haleyville is poised for continued growth over the coming decade due to increased economic development. Because of this population shift, new & improving outdoor recreation opportunities are vital to continue the city's recent string of successes.

10 points.

NOTE: Property acquired with RTP funds must remain open to the public in perpetuity. Should the property cease to be open to the public for trail use, the applicant must repay the RTP 80% (or the federal percentage share) of the fair market value of the property at the time of the change in use. If the project is located on an easement or on leased land, the minimum timeframe for the easement or lease is 25 years. The project must remain open for public access for the use for which the RTP funds were intended during that time. For development projects on applicant owned property, the project must remain open for public access for the use for which the RTP funds were intended for a minimum of 25 years.

Total Project Cost: $252,598.50 Funds Requested: $200,000.00

Important Note: The maximum grant amount by trail type is **$200,000.00** for non-motorized, single-use trails; **$400,000.00** for non-motorized, diverse-use trails; **$524,937.00** for motorized trails; or **$87,489.00** for education projects.

The applicant certifies that the data contained in the application is true and correct; the application has been duly authorized; and, the applicant understands that incorrect or incomplete information may cause the application to be rejected.

Ken Sunseri Mayor

(Chief Elected Official's Signature) (Title)

9-8-2022

(Date)

Trails Improvement Project
Rocky Ravine Park
City of Haleyville, Alabama

Project Cost Estimate

Item Number	Quantity	Unit	Item Description	Unit Cost	Total Cost
1	1.0	L.S.	Work Area #1 - Concrete Sidewalk (40' x 4')	$3,500.00	$3,500.00
2	1.0	L.S.	Work Area #2 - Replace Wooden Steps (8 Steps)	$2,400.00	$2,400.00
3	1.0	L.S.	Work Area #3 - Replace Wooden Steps (16 Steps)	$5,000.00	$5,000.00
4	1.0	L.S.	Work Area #4 - Construct Wooden Bridge (12' x 6')	$7,200.00	$7,200.00
5	1.0	L.S.	Work Area #5 - 15" HDPE Culvert (10')	$500.00	$500.00
6	1.0	L.S.	Work Area #6 - Replace Existing Wooden Bridge with Wooden Bridge (12' x 6')	$10,000.00	$10,000.00
7	1.0	L.S.	Work Area #7 - Clean, Seal, Install Slip Resistant Hardware Cloth	$2,500.00	$2,500.00
8	1.0	L.S.	Work Area #8 - Clean, Seal, Install Slip Resistant Hardware Cloth	$2,500.00	$2,500.00
9	1.0	L.S.	Work Area #9 - Clean, Seal, Install Slip Resistant Hardware Cloth	$2,500.00	$2,500.00
10	1.0	L.S.	Work Area #10 - Clean, Seal, Install Slip Resistant Hardware Cloth	$2,500.00	$2,500.00
11	1.0	L.S.	Work Area #11 - Clean, Seal, Install Slip Resistant Hardware Cloth	$2,500.00	$2,500.00
12	1.0	L.S.	Work Area #12 - Clean, Seal, Install Slip Resistant Hardware Cloth	$2,500.00	$2,500.00
13	1.0	L.S.	Work Area #13 - Clean, Seal, Install Slip Resistant Hardware Cloth	$2,500.00	$2,500.00
14	1.0	L.S.	Work Area #14 - Clean, Seal, Install Slip Resistant Hardware Cloth	$2,500.00	$2,500.00
15	1.0	L.S.	Work Area #15 - Clean, Seal, Install Slip Resistant Hardware Cloth and Replace Handrail	$3,000.00	$3,000.00
16	1.0	L.S.	Work Area #16 - Clean, Seal, Install Slip Resistant Hardware Cloth	$2,500.00	$2,500.00
17	1.0	L.S.	Work Area #17 - Clean, Seal, Install Slip Resistant Hardware Cloth and Replace Handrail	$3,000.00	$3,000.00
18	1.0	L.S.	Work Area #18 - Clean, Seal, Install Slip Resistant Hardware Cloth and Replace Handrail	$3,000.00	$3,000.00
19	1.0	L.S.	Work Area #19 - Clean, Seal, Install Slip Resistant Hardware Cloth and Replace Handrail	$3,000.00	$3,000.00
20	1.0	L.S.	Work Area #20 - Clean, Seal, Install Slip Resistant Hardware Cloth and Replace Handrail	$3,000.00	$3,000.00
21	1.0	L.S.	Work Area #21 - Clean, Seal, Install Slip Resistant Hardware Cloth	$2,500.00	$2,500.00
22	1.0	L.S.	Work Area #22 - Clean, Seal, Install Slip Resistant Hardware Cloth and Replace Handrail	$3,000.00	$3,000.00

Item Number	Quantity	Unit	Item Description	Unit Cost	Total Cost
23	1.0	L.S.	Work Area #23 - Clean, Seal, Install Slip Resistant Hardware Cloth	$3,000.00	$3,000.00
24	1.0	L.S.	Work Area #24 - Clean, Seal, Install Slip Resistant Hardware Cloth and Replace Handrail	$3,000.00	$3,000.00
25	1.0	L.S.	Work Area #25 - Clean, Seal, Install Slip Resistant Hardware Cloth and Replace Handrail	$3,000.00	$3,000.00
26	1.0	L.S.	Work Area #26 - Clean, Seal, Install Slip Resistant Hardware Cloth and Replace Seat and Handrail	$4,000.00	$4,000.00
27	1.0	L.S.	Work Area #27 - Replace Steps and Handrail (9 Steps)	$2,700.00	$2,700.00
28	1.0	L.S.	Work Area #28 - Replace Steps and Handrail (11 Steps) and Add Two Concrete Steps	$4,500.00	$4,500.00
29	2.0	Each	Trail Head Signs	$5,500.00	$11,000.00
30	8.0	Each	Benches - 2' x 12" x 12' Long, Sitting on Four 6" x 6" Posts	$1,000.00	$8,000.00
31	2.0	Each	Shelter	$2,500.00	$5,000.00
32	240.0	L.F.	Fence Around Concrete Basin (four board)	$20.00	$4,800.00
33	3,200.0	S.F.	Existing Bridges: Clean, Seal, Install Slip Resistant Hardware Cloth	$3.00	$9,600.00
34	450.0	L.F.	Walking Bridge	$190.00	$85,500.00
35	200.0	L.F.	Handrail at City Lake Entrance	$15.00	$3,000.00
				Subtotal	***$218,700.00***
				Engineering Design and Inspection (10%)	***$21,870.00***
				Subtotal	***$240,570.00***
				Administration (5%)	***$12,028.50***
				Total Estimated Project Cost	***$252,598.50***
				RTP GRANT FUNDING	*$200,000.00*
				CITY OF HALEYVILLE MATCH	*$52,598.50*

Project Cost Estimate

The Recreational Trails Program provides **80/20 matching** fund grants. That is, the RTP will fund up to 80 percent of the project cost and the grant recipient must provide at least 20 percent in the form of cash, in-kind, and/or donated contributions.

Eligible Costs

1. Design, engineering, and construction oversight services (**may not exceed 10% of the total construction cost**)
2. Direct labor
3. Special tradesmen secured under a service purchase contract
4. Rental of equipment
5. Construction contracts
6. Project materials
7. Signage[1]
8. Land acquisition
9. Professional project administration (grant consultant) (**may not exceed 5% of total project cost**)

PROJECT DEVELOPMENT BUDGET

BUDGET ITEM	TOTAL	RTP SHARE	MATCHING SHARE
Acquisition			
Construction Contracts	$218,700.00	$172,881.20	$45,818.80
Equipment Rental			
Labor			
Signage			
Supplies/Materials			
Administration	$12,028.50	$9,622.80	$2,405.70
Engineering	$21,870.00	$17,496.00	$4,374.00
TOTAL PROJECT COST	**$252,598.50**	**$200,000.00**	**$52,598.50**

[1] Signs which function as traffic control devices must conform with the Manual on Uniform Traffic Control Devices (MUTCD). Part IX of the MUTCD, Traffic Controls for Bicycle Facilities, covers the bicycle related signs, pavement markings, and signals which may be used on highways or bikeways. Part IX is applicable to shared use paths (non-motorized multiple-use trails which may provide a transportation purpose). The publication Standard Highway Signs has the detailed drawings for the highway signs prescribed in the MUTCD. These documents are available for purchase from the Superintendent of Documents, U.S. Government Printing Office, Washington, DC 20402.

Signs which do not function as traffic control devices are not subject to the MUTCD. However, informational signs and kiosks must take into consideration the needs of various users, such as: people who are blind or who have low vision, people who use wheelchairs, and children.

TRAILS IMPROVEMENT PROJECT
ROCKY RAVINE PARK
CITY OF HALEYVILLE, ALABAMA

DETAILED PROJECT BUDGET WITH DESCRIPTIVE NARRATIVE

The attached Narrative includes photographs and describes the Scope of Work for each work area, including estimated construction cost and various details.

Work areas are shown on the Rocky Ravine North and South Trail drawings (Preliminary Site Plan).

Work Area No. 1 – New Concrete Sidewalk / Steps

Photo #1 – Looking East, Down Proposed Sidewalk Area

Photo #2 – Looking West, Up Proposed Sidewalk Area

Scope of Work – Work Area No. 1:

- Divert storm water from running down the trail by cutting a small ditch over to the existing ditch toward State Route 195.
- Excavate, form, and cast-in-place a concrete sidewalk with steps. Concrete is to be 4000 psi with welded wire fabric, 5-inch thick by 4-feet wide and 40-feet long, with sawcut crack control joints on 5-foot spacing, broom finished. All exposed edges are to be rounded to prevent chipping.
- When forms are erected, honeycombs are to be filled, and the area backfilled, seeded, and mulched.

Lump Sum Cost – Work Area No. 1: $3,500.00

Work Area No. 2 – Replace Existing Wooden Steps with New Wooden Steps

Photo #3 – Looking East, Down at Existing Wooden Steps to be Replaced

Photo #4 – Looking West, Up at Existing Wooden Steps to be Replaced

Photo #5 – Looking West, Area at the Foot of the Steps to be Replaced

Scope of Work – Work Area No. 2:

- Remove existing wooden steps.
- Construct new wooden steps – 3-foot wide by 7 or 8 steps. Handrails are required on both sides of steps (refer to details).
- New steps are to be anchored to the existing bank with post or anchor bolts (refer to details).
- Construct new wooden handrail at base of steps – 8-foot long. See anchoring details.
- Apply one coat of wood sealer (refer to specification sheet).
- Install hardware cloth on walking surface (refer to specification sheet).

Lump Sum Cost – Work Area No. 2: $2,400.00

Work Area No. 3 – Replace Existing Wooden Steps with New Wooden Steps

Photo #6 – Looking East, Down at Existing Wooden Steps to be Replaced

Photo #7 – Looking West, Up at Existing Wooden Steps to be Replaced

Photo #8 – Looking West, Up at Side of the Wooden Steps to be Replaced

Photo #9 – Looking West, Up at Existing Wooden Steps to be Replaced. See Base Where Two or Three New Concete / Brick Steps are to be Constructed.

Scope of Work – Work Area No. 3:

- Remove existing wooden steps.
- Construct new wooden steps – 3-foot wide by 15 or 16 steps. Handrails are required on both sides of steps (refer to details).
- New steps are to be anchored to the existing bank with post or anchor bolts (refer to details).
- Construct new concrete or brick steps at bottom in the hole at the base of the tree (refer to photo and details).
- Apply one coat of wood sealer (refer to specification sheet).
- Install hardware cloth on walking surface (refer to specification sheet).

Lump Sum Cost – Work Area No. 3: $5,000.00

Work Area No. 4 – Construct a 12-foot x 8-foot Bridge

Photo #10 – Looking North at Ditch

Photo #11 – Looking North at Basin / Ditch

Scope of Work – Work Area No. 4:

- Clear 100 L.F. x 5-foot walking path from existing walking path to new bridge to existing walking path.
- Construct a 12-foot x 8-foot bridge (refer to details).
- Install crushed stone over walking path; 10 feet on both sides.
- Apply one coat of wood sealer (refer to specification sheet).
- Install hardware cloth on walking surface (refer to specification sheet).

Lump Sum Cost – Work Area No. 4: $7,200.00

Work Area No. 5 – Install 10 Feet of 15-inch Drain Pipe

Photo #12 – Looking South at Wet Area to be Drained

Scope of Work – Work Area No. 5:

- Drain area with hand tool (shovel).
- Install 10 feet of 15-inch HDPE double-wall culvert.
- Install crushed stone over walking path; 10 feet on both sides.

Lump Sum Cost – Work Area No. 5: $500.00

Work Area No. 6 – Replace Foot Bridge

Photo #13 – Looking South at Existing Foot Bridge to be Replaced

Photo #14 – Looking East at Foot Bridge to be Replaced

Scope of Work – Work Area No. 6:

- Remove existing foot bridge.
- Construct a 12-foot by 8-foot foot bridge (refer to details).
- Install crushed stone over walking path; 10 feet on both sides.
- Apply one coat of wood sealer (refer to specification sheet).
- Install hardware cloth on walking surface (refer to specification sheet).

Lump Sum Cost – Work Area No. 6: $10,000.00

Work Area No. 7 – Wooden Walking Ramp #1

Photo #15 – Looking Northwest at Ramp

Scope of Work – Work Area No. 7:

- Approximate Dimensions = 19' x 44" + 1/2 Step
- Remove Roofing Material
- Pressure Wash
- Apply one coat of wood sealer (refer to specification sheet).
- Install hardware cloth on walking surface (refer to specification sheet).

Lump Sum Cost – Work Area No. 7: $2,500.00

Work Area No. 8 – Wooden Walking Ramp #2

Photo #16 – Looking Northwest at Ramp

Scope of Work – Work Area No. 8:

- Approximate Dimensions = 17' x 44" + 1/2 Step
- Remove Roofing Material
- Pressure Wash
- Apply one coat of wood sealer (refer to specification sheet).
- Install hardware cloth on walking surface (refer to specification sheet).

Lump Sum Cost – Work Area No. 8: $2,500.00

Work Area No. 9 – Wooden Walking Ramp #3

Photo #17 – Looking Northwest at Ramp

Scope of Work – Work Area No. 9:

- Approximate Dimensions = 16' x 44" + 1/2 Step
- Remove Roofing Material
- Pressure Wash
- Apply one coat of wood sealer (refer to specification sheet).
- Install hardware cloth on walking surface (refer to specification sheet).

Lump Sum Cost – Work Area No. 9: $2,500.00

Work Area No. 10 – Wooden Walking Ramp #4

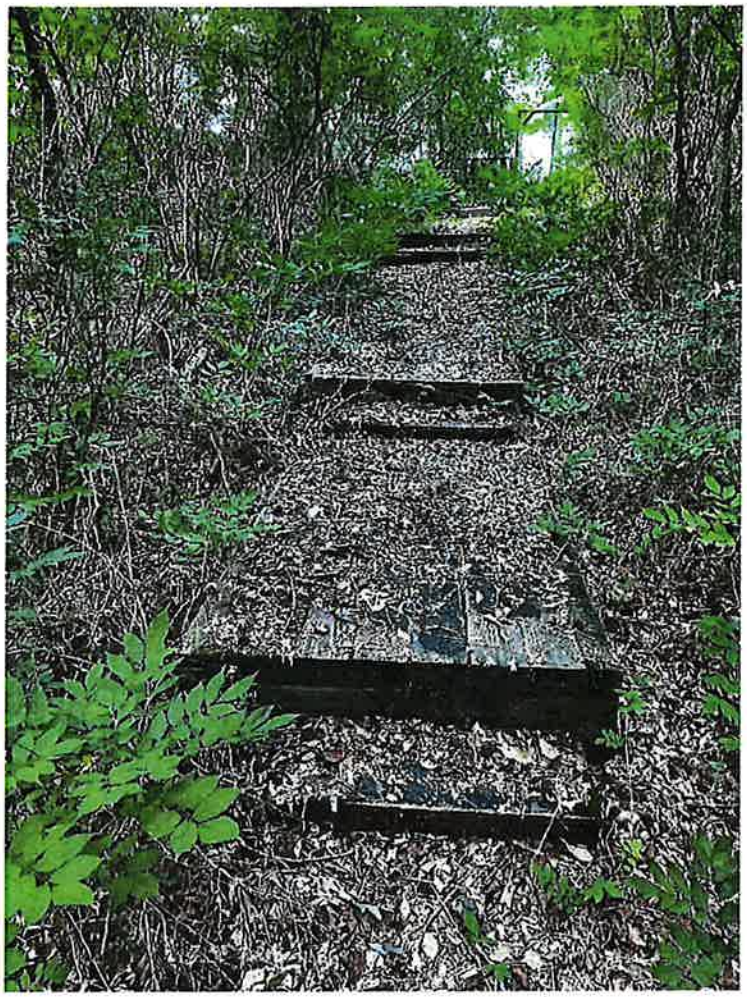

Photo #18 – Looking Northwest at Ramp

Scope of Work – Work Area No. 10:

- Approximate Dimensions = 6' x 44" + Step
- Remove Roofing Material
- Pressure Wash
- Apply one coat of wood sealer (refer to specification sheet).
- Install hardware cloth on walking surface (refer to specification sheet).

Lump Sum Cost – Work Area No. 10: $2,500.00

Work Area No. 11 – Wooden Walking Ramp #5

Photo #19 – Looking Northwest at Ramp

Scope of Work – Work Area No. 11:

- Approximate Dimensions = 7' x 44" + Step
- Remove Roofing Material
- Pressure Wash
- Apply one coat of wood sealer (refer to specification sheet).
- Install hardware cloth on walking surface (refer to specification sheet).

Lump Sum Cost – Work Area No. 11: $2,500.00

Work Area No. 12 – Wooden Walking Ramp #6

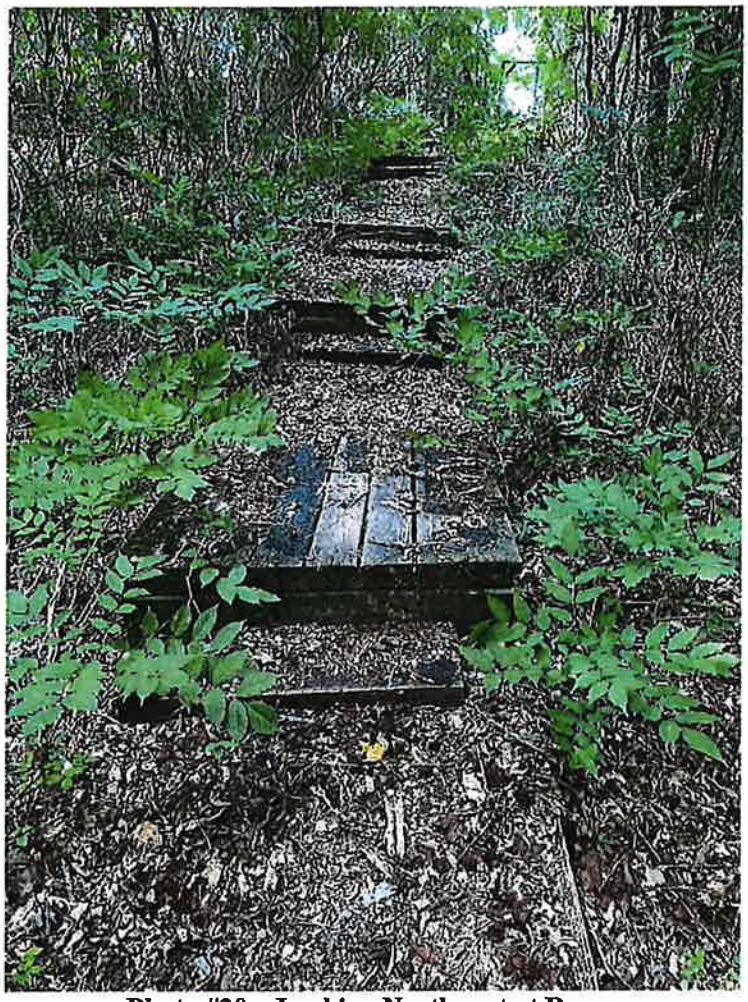

Photo #20 – Looking Northwest at Ramp

Scope of Work – Work Area No. 12:

- Approximate Dimensions = 8' x 44" + Step
- Remove Roofing Material
- Pressure Wash
- Apply one coat of wood sealer (refer to specification sheet).
- Install hardware cloth on walking surface (refer to specification sheet).

Lump Sum Cost – Work Area No. 12: $2,500.00

Work Area No. 13 – Wooden Walking Ramp #7

Photo #21 – Looking Northwest at Ramp

Scope of Work – Work Area No. 13:

- Approximate Dimensions = 16' x 44" + Step
- Remove Roofing Material
- Pressure Wash
- Apply one coat of wood sealer (refer to specification sheet).
- Install hardware cloth on walking surface (refer to specification sheet).

Lump Sum Cost – Work Area No. 13: $2,500.00

Work Area No. 14 – Wooden Walking Ramp #8

Photo #22 – Looking Northwest at Ramp

Scope of Work – Work Area No. 14:

- Approximate Dimensions = 16' x 44" + Step
- Remove Roofing Material
- Pressure Wash
- Apply one coat of wood sealer (refer to specification sheet).
- Install hardware cloth on walking surface (refer to specification sheet).

Lump Sum Cost – Work Area No. 14: $2,500.00

Work Area No. 15 – Wooden Walking Ramp #9

Photo #23 – Looking Northwest at Ramp

Scope of Work – Work Area No. 15:

- Approximate Dimensions = 16' x 44" + Step
- Remove Roofing Material
- Pressure Wash
- Apply one coat of wood sealer (refer to specification sheet).
- Install hardware cloth on walking surface (refer to specification sheet).
- Upgrade handrail (refer to detail).

Lump Sum Cost – Work Area No. 15: $3,000.00

Work Area No. 16 – Wooden Walking Ramp #10

Photo #24 – Looking Northwest at Ramp

Scope of Work – Work Area No. 16:

- Approximate Dimensions = 16' x 44" + Step
- Remove Roofing Material
- Pressure Wash
- Apply one coat of wood sealer (refer to specification sheet).
- Install hardware cloth on walking surface (refer to specification sheet).
- Upgrade handrail on one side (refer to detail).

Lump Sum Cost – Work Area No. 16: $2,500.00

Work Area No. 17 – Wooden Walking Ramp #11

Photo #25 – Looking Northwest at Ramp

Scope of Work – Work Area No. 17:

- Approximate Dimensions = 16' x 28" + Two Steps
- Remove Roofing Material
- Pressure Wash
- Apply one coat of wood sealer (refer to specification sheet).
- Install hardware cloth on walking surface (refer to specification sheet).
- Upgrade handrail on both sides (refer to detail).

Lump Sum Cost – Work Area No. 17: $3,000.00

Work Area No. 18 – Wooden Walking Ramp #12

Photo #26 – Looking Northwest at Ramp

Scope of Work – Work Area No. 18:

- Approximate Dimensions = 16' x 36" + Two Steps
- Remove Roofing Material
- Pressure Wash
- Apply one coat of wood sealer (refer to specification sheet).
- Install hardware cloth on walking surface (refer to specification sheet).
- Upgrade handrail on both sides (refer to detail).

Lump Sum Cost – Work Area No. 18: $3,000.00

Work Area No. 19 – Wooden Walking Ramp #13

Photo #27 – Looking Northwest at Ramp

Scope of Work – Work Area No. 19:

- Approximate Dimensions = 8' x 36" + Two Steps
- Remove Roofing Material
- Pressure Wash
- Apply one coat of wood sealer (refer to specification sheet).
- Install hardware cloth on walking surface (refer to specification sheet).
- Upgrade handrail on both sides (refer to detail).

Lump Sum Cost – Work Area No. 19: $3,000.00

Work Area No. 20 – Wooden Walking Ramp #14

Photo #28 – Looking Northwest at Ramp

Scope of Work – Work Area No. 20:

- Approximate Dimensions = 8' x 36" + One Step
- Remove Roofing Material
- Pressure Wash
- Apply one coat of wood sealer (refer to specification sheet).
- Install hardware cloth on walking surface (refer to specification sheet).
- Upgrade handrail on both sides (refer to detail).

Lump Sum Cost – Work Area No. 20: $3,000.00

Work Area No. 21 – Wooden Walking Ramp #15

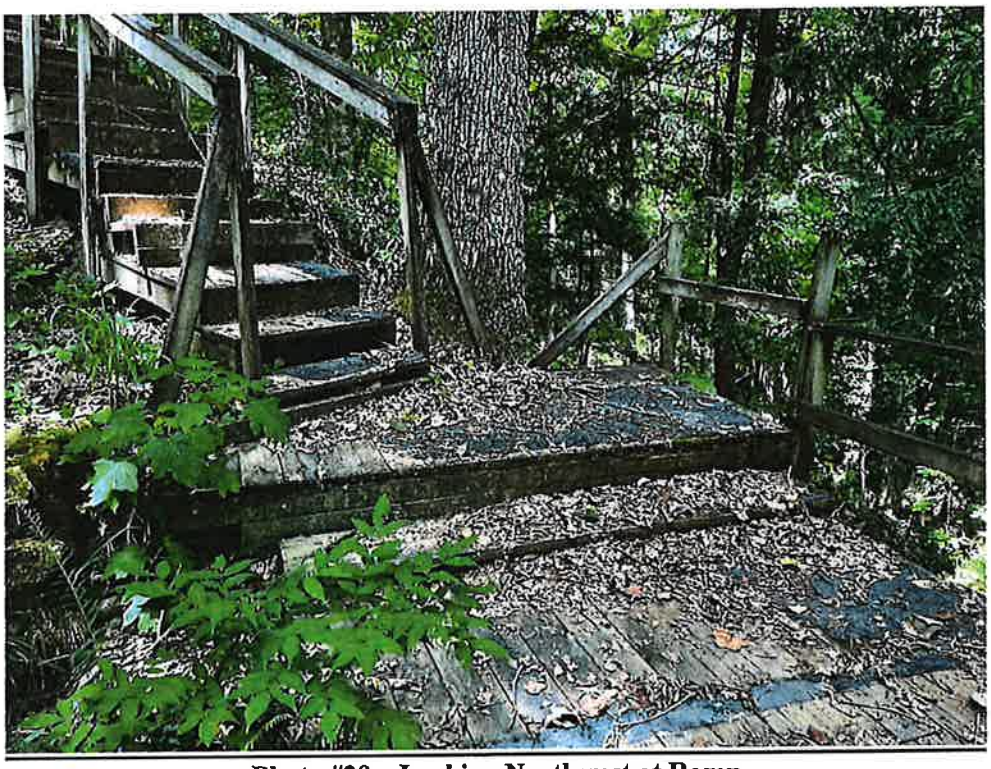

Photo #29 – Looking Northwest at Ramp

Scope of Work – Work Area No. 21:

- Approximate Dimensions = 5' x 36" + Two Steps
- Remove Roofing Material
- Pressure Wash
- Apply one coat of wood sealer (refer to specification sheet).
- Install hardware cloth on walking surface (refer to specification sheet).
- Upgrade handrail on both sides (refer to detail).

Lump Sum Cost – Work Area No. 21: $2,500.00

Work Area No. 22 – Wooden Walking Ramp #16

Photo #30 – Looking Northwest at Ramp

Scope of Work – Work Area No. 22:

- Approximate Dimensions = 5' x 36" + Two Steps
- Remove Roofing Material
- Pressure Wash
- Apply one coat of wood sealer (refer to specification sheet).
- Install hardware cloth on walking surface (refer to specification sheet).
- Upgrade handrail on both sides (refer to detail).

Lump Sum Cost – Work Area No. 22: $3,000.00

Work Area No. 23 – Wooden Walking Ramp #17

Photo #31 – Looking Northwest at Ramp

Scope of Work – Work Area No. 23:

- Approximate Dimensions = 5' x 36" + Two Steps
- Remove Roofing Material
- Pressure Wash
- Apply one coat of wood sealer (refer to specification sheet).
- Install hardware cloth on walking surface (refer to specification sheet).
- Upgrade handrail on both sides (refer to detail).

Lump Sum Cost – Work Area No. 23: $3,000.00

Work Area No. 24 – Deck #1

Photo #32 – Looking Northwest at Deck

Scope of Work – Work Area No. 24:

- Approximate Dimensions = 3' x 9' + One Step
- Remove Roofing Material
- Pressure Wash
- Apply one coat of wood sealer (refer to specification sheet).
- Install hardware cloth on walking surface (refer to specification sheet).
- Upgrade handrail on both sides (refer to detail).

Lump Sum Cost – Work Area No. 24: $3,000.00

Work Area No. 25 – Deck #2

Photo #33 – Looking Northwest at Deck

Scope of Work – Work Area No. 25:

- Approximate Dimensions = 6' x 8' + One Step
- Remove Roofing Material
- Pressure Wash
- Apply one coat of wood sealer (refer to specification sheet).
- Install hardware cloth on walking surface (refer to specification sheet).
- Upgrade handrail – one side (refer to detail).

Lump Sum Cost – Work Area No. 25: $3,000.00

Work Area No. 26 – Deck #3 with Seat

Photo #34 – Looking Northwest at Deck with Seat

Photo #35 – Looking Northwest at Deck with Seat

Scope of Work – Work Area No. 26:

- Approximate Dimensions = 10' x 6' + One Step
- Remove Roofing Material
- Pressure Wash
- Apply one coat of wood sealer (refer to specification sheet).
- Install hardware cloth on walking surface (refer to specification sheet).
- Upgrade handrail – one side (refer to detail).
- Replace Seat, including supports.

Lump Sum Cost – Work Area No. 26: $4,000.00

Work Area No. 27 – Wooden Steps

Photo #36
Looking Southeast Down at the Steps

Photo #37
Looking Northwest Up at the Steps

Scope of Work – Work Area No. 27:

- Remove Existing Wooden Steps
- Construct New Steps – 36-inches wide, 8 or 9 steps, with handrails on one side.

Lump Sum Cost – Work Area No. 27: $2,700.00

Work Area No. 28 – Wooden Steps

Photo #38
Looking Southwest Up at the Top Steps

Photo #39
Looking Southwest Up at the Steps

Photo #40
Looking Southwest Up at the Stone Steps

Scope of Work – Work Area No. 28:

- Remove Existing Wooden Steps
- Construct New Steps – 36-inches wide, 10 or 11 steps, with handrail on one side.
- Construct New Wooden Steps at Base – 36-inches wide x 4 or 5 Step with handrails on both sides.

Lump Sum Cost – Work Area No. 28: $4,500.00

Work Area No. 29 – Trail Head Signs

Photo #41 – Existing Trail Sign

Scope of Work – Work Area No. 29:

- Replace existing sign with a larger, covered version that contains more information.
- Construct two signs—one to be located at each end of the trail.

Lump Sum Cost – Work Area No. 29: $11,000.00

30. **Benches for Sitting** **$8,000.00**
2" x 12" x 12' Long, Sitting on Four (4) 6" x 6" Posts – Provide Eight (8)

31. **Shelter**..... **$5,000.00**
6' Wide x 10' Long x 8' Eve Height with Three Sides Closed to Protect Hikers from Weather. Provide Two (2)

32. **Fence Around Concrete Basin** **$4,800.00**
Construct a simple four (4) board high fence with 4" x 4" posts and five 4" x 6" boards. This concrete basin is believed to be an old water holding tank for the City's water collection system. The fence is to protect people from climbing on the walls.

33. **Pressure Wash, Seal, Install Slip Resistant Hardware Cloth (3,200 S.F.)**..... **$9,600.00**
Same work to be completed on walking ramps described in Work Items #7 - #26.

34. **Walking Bridge – 6' Wide (450 L.F.)**..... **$85,500.00**
Construct a six foot wide wooden foot bridge in areas where the cross slope is steep due to the existing terrain and ongoing erosion. Refer to photo showing the cross slope of the existing trail.

35. **Handrail at City Lake Park Entrance (200 L.F.) $3,000.00**
Extend the existing guardrail / handrail down the slope at the entrance. Refer to the photo below.

TOTAL ESTIMATED CONSTRUCTION COST: $218,700.00

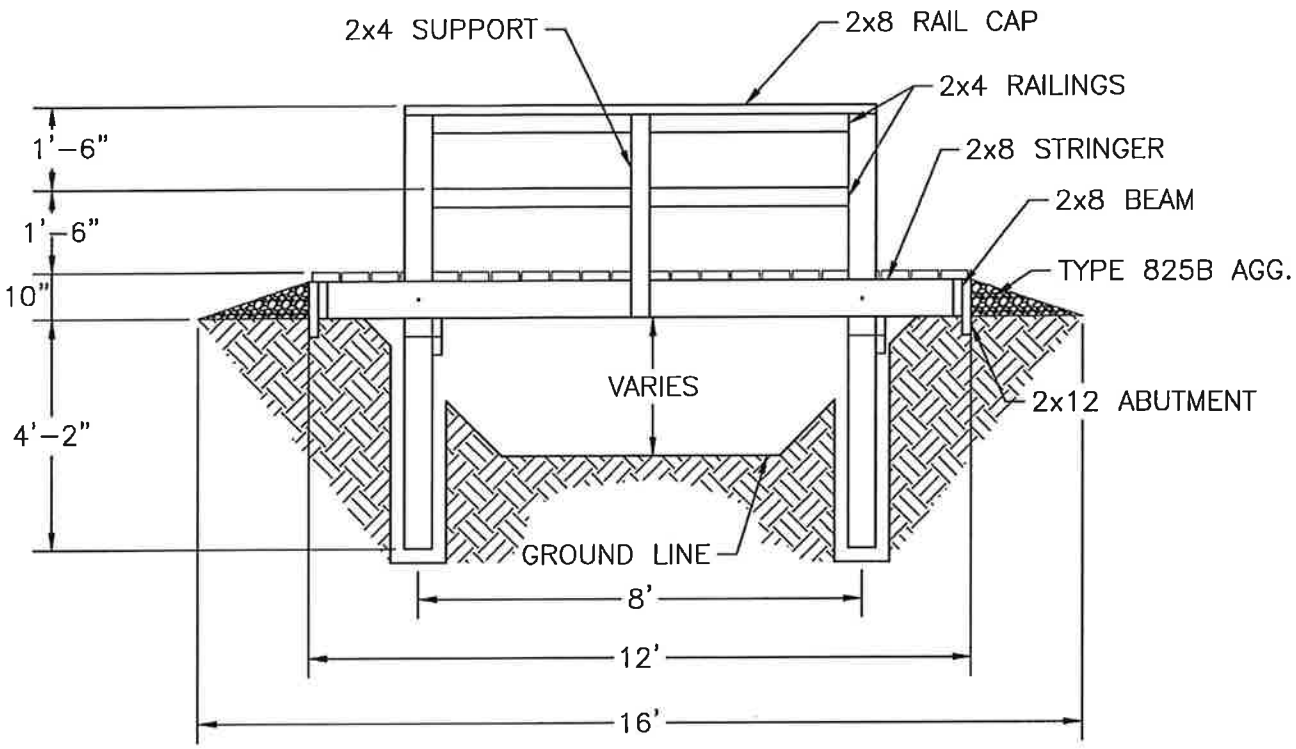

ELEVATION VIEW

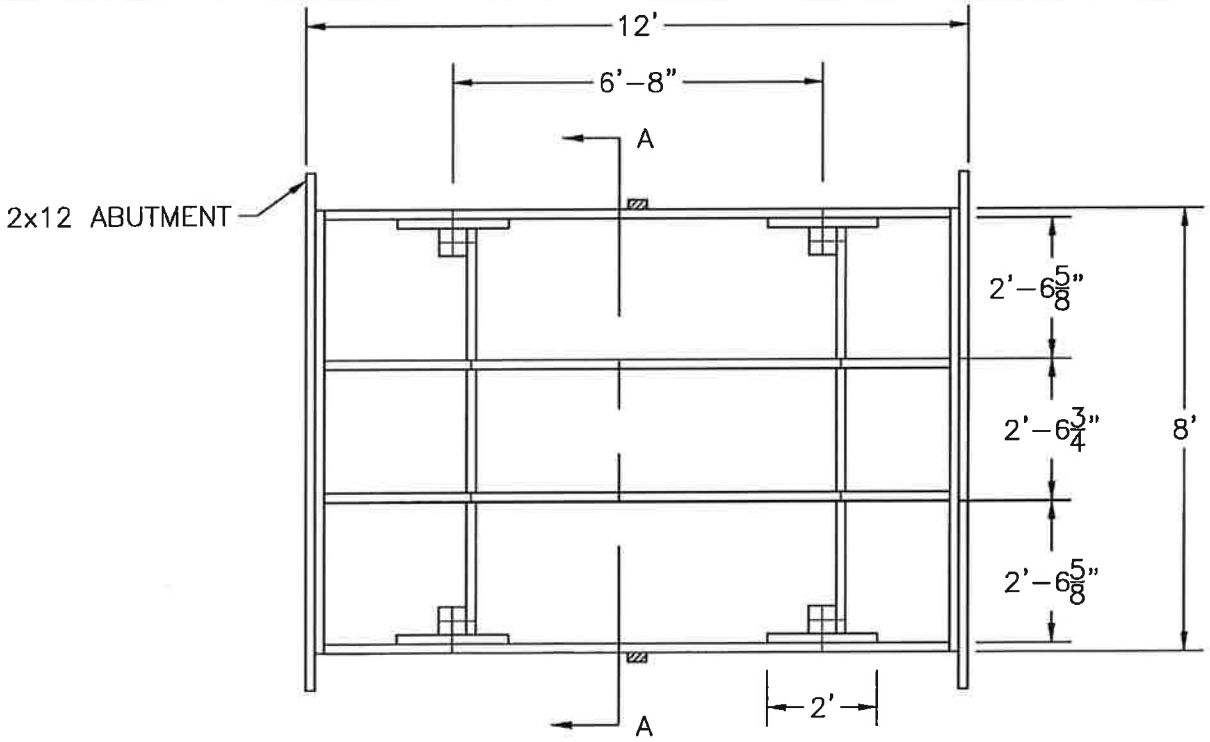

FRAMING PLAN

SCALE: 1" = 40'

DRAWN BY: SRT DATE: Sep 08, 2022 DWG LAYOUT: WOODEN BRIDGE	APPROVED BY: JCC PROJ. NO.: 21-131 REPLACEMENT 4 SRT - RECOVER 08-04-2022.dwg	The Cassady Company, Inc. *Providing Solutions for Water, Wastewater, and Storm Water Problems* 4700 Highway 69 North • Northport, AL 35473 Phone (205) 330-0089 • Fax (205) 330-0095	PROJECT TRAILS IMPROVEMENT PROJECT ROCKY RAVINE PARK CITY OF HALEYVILLE, ALABAMA	SHT. NO. P3

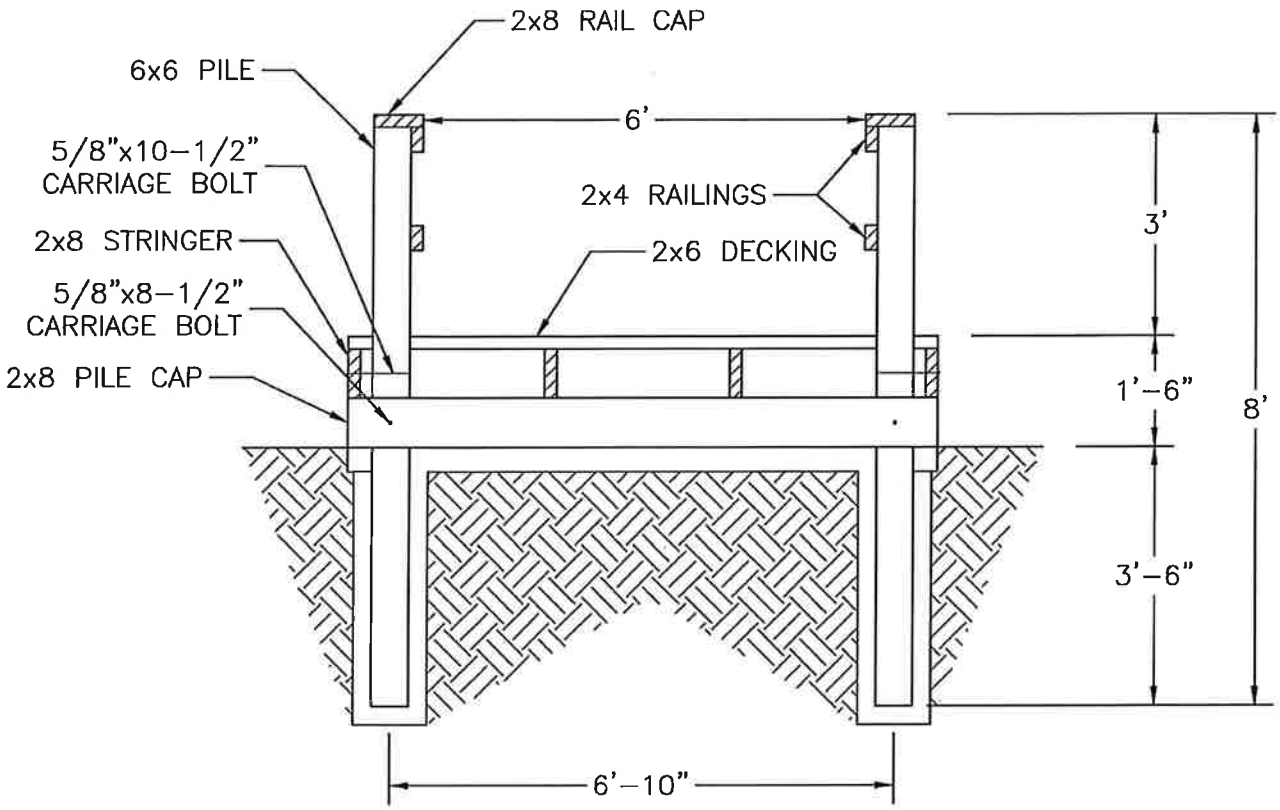

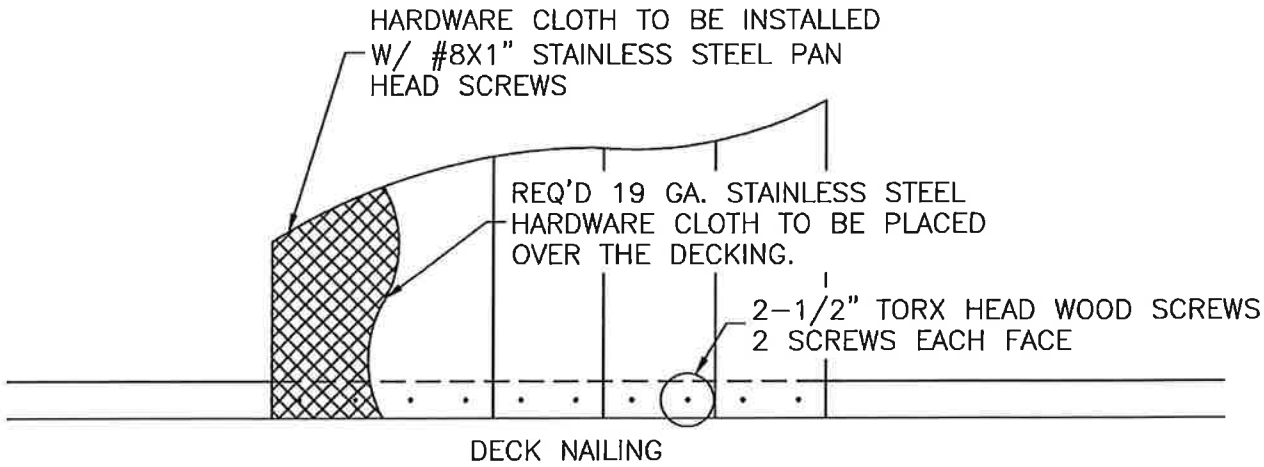

FASTENER DETAILS

NOTES TO CONSTRUCTION:

1. ALL LUMBER TO BE USED SHOULD BE TREATED.
2. 6X6 PILES ARE TO BE BURIED AT LEAST 3' DEEP – BACKFILL WITH CONCRETE.
3. DECKING IS TO BE FASTENED WITH 2-1/2" TORX HEAD WOOD SCREWS. (EXTERIOR GRADE)
4. CROSS BEAMS ARE TO BE FASTENED WITH 3" TORX HEAD WOOD SCREWS. (EXTERIOR GRADE)
5. HARDWARE CLOTH IS TO BE FASTENED WITH #8-1" STAINLESS STEEL PAN HEAD SCREWS.

SCALE: 1" = 30'

DRAWN BY: SRT DATE: Sep 08, 2022 DWG LAYOUT: WOODEN BRIDGE REPLACEMENT 2	APPROVED BY: JCC PROJ. NO.: 21-131 REPLACEMENT 2SRT - RECOVER 08-04-2022.dwg	The Cassady Company, Inc. Providing Solutions for Water, Wastewater, and Storm Water Problems 4700 Highway 69 North • Northport, AL 35473 Phone (205) 330-0098 • Fax (205) 330-0099	PROJECT TRAILS IMPROVEMENT PROJECT ROCKY RAVINE PARK CITY OF HALEYVILLE, ALABAMA	SHT. NO. P4

NOTES TO CONSTRUCTION:

1. ALL LUMBER TO BE USED SHOULD BE TREATED.
2. SUPPORT BRACES ARE TO BE FASTENED WITH 3" TORX HEAD WOOD SCREWS (EXTERIOR).

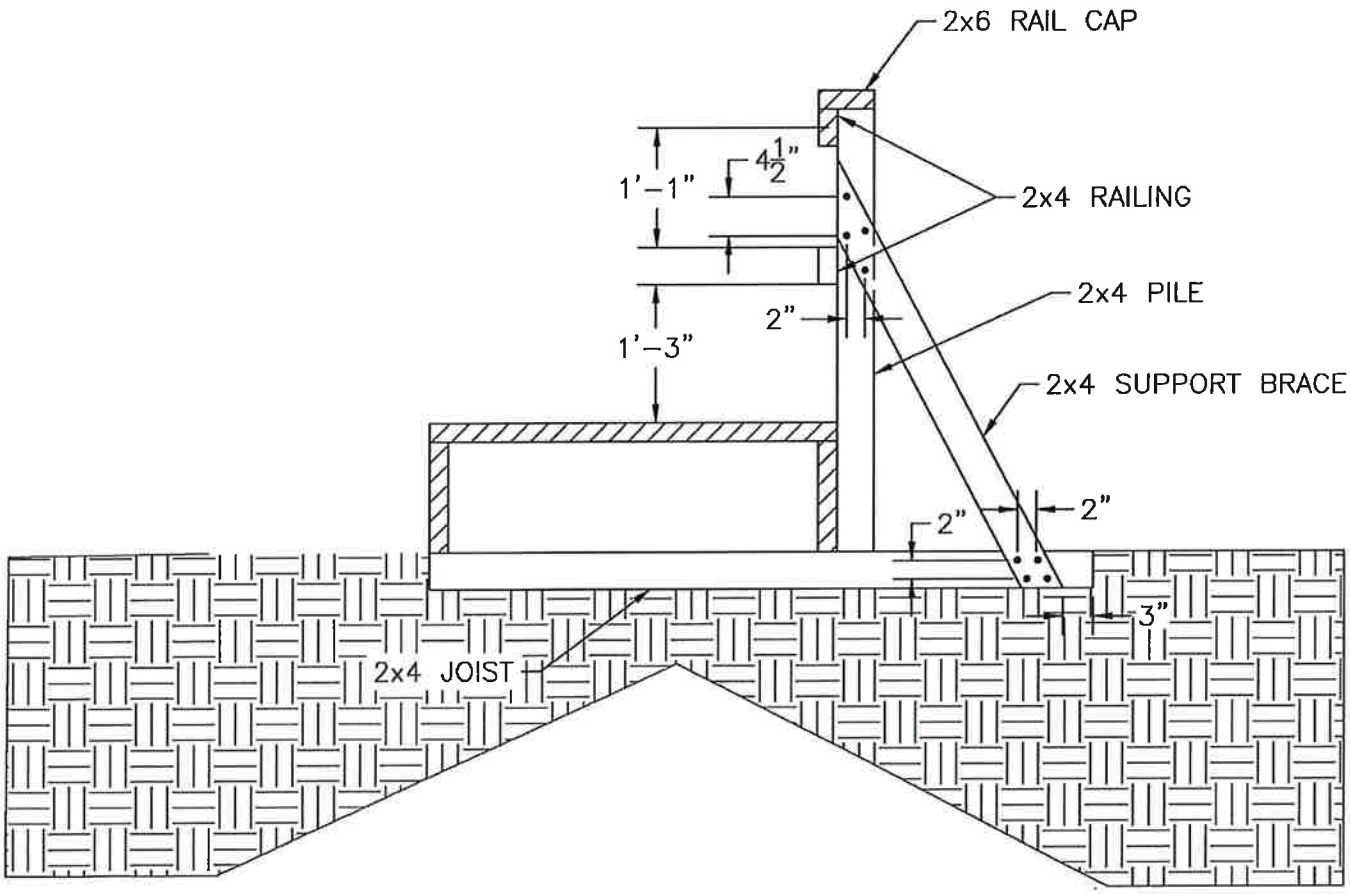

SCALE: 1" = 20'

DRAWN BY: SRT DATE: Sep 08, 2022 DWG LAYOUT: HANDRAIL DETAIL	APPROVED BY: JCC PROJ. NO.: 21-131 DWG.: WALKWAY - SRT - RECOVER 08-04-2022.dwg	The Cassady Company, Inc. *Providing Solutions for Water, Wastewater, and Storm Water Problems* 4700 Highway 69 North • Northport, AL 35473 Phone (205) 330-0000 • Fax (205) 330-0005	PROJECT TRAILS IMPROVEMENT PROJECT ROCKY RAVINE PARK CITY OF HALEYVILLE, ALABAMA	SHT. NO. D1

TRAILS IMPROVEMENT PROJECT
ROCKY RAVINE PARK
CITY OF HALEYVILLE, ALABAMA

Proposed Project Schedule

Field Survey and Engineering Design.....4 Months

Advertisement for Bids .....2 Months

Award and Execution of Contract.....2 Months

Construction .....7 Months

Project Closeout.....3 Months

Total Project Completion .....18 Months

PRELIMINARY SITE PLAN

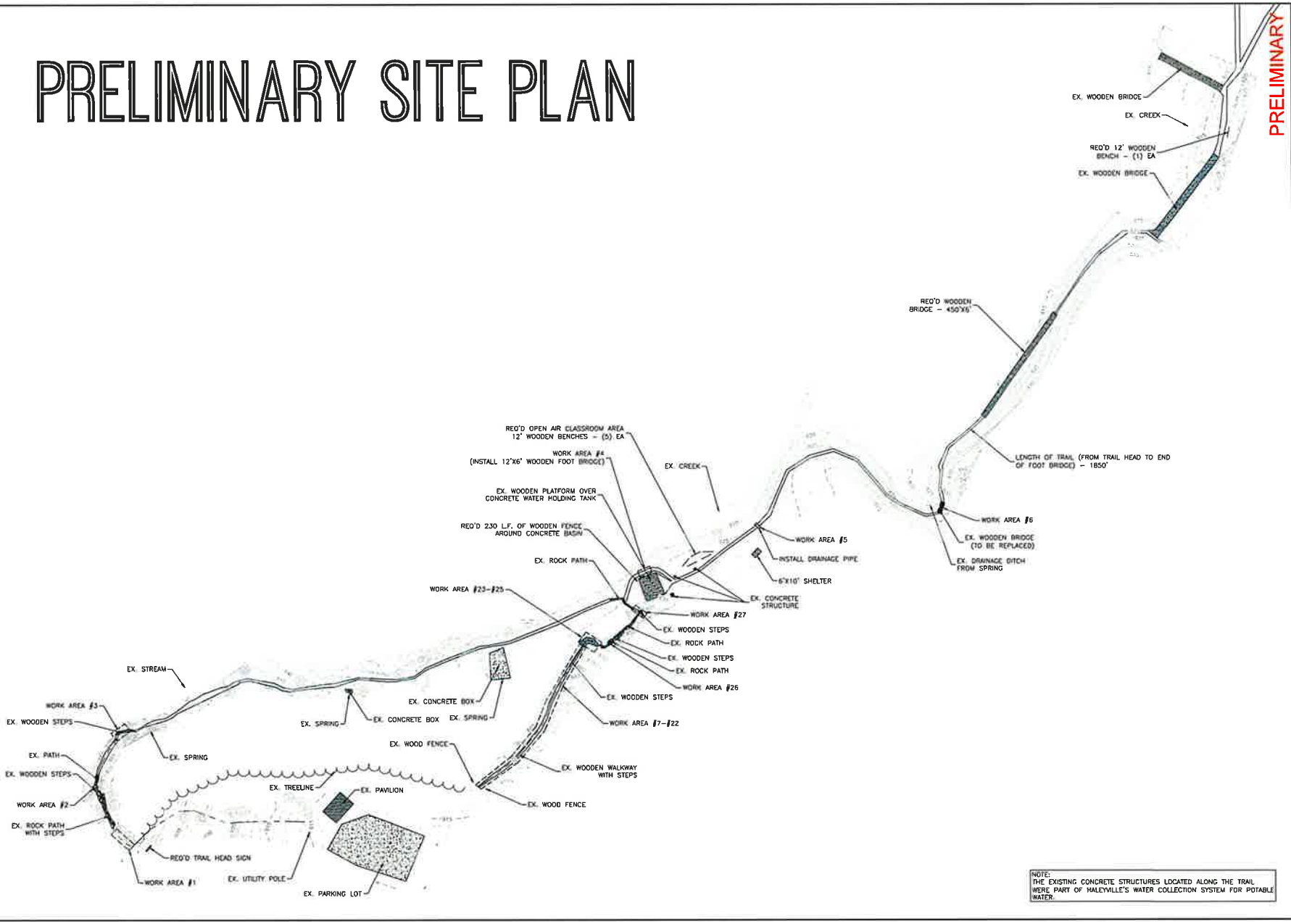

NOTE:
THE EXISTING CONCRETE STRUCTURES LOCATED ALONG THE TRAIL WERE PART OF HALEYVILLE'S WATER COLLECTION SYSTEM FOR POTABLE WATER.

PRELIMINARY

SCALE: 1"=10'

ROCKY RAVINE - NORTH TRAIL

The Cassady Company, Inc.
Providing Solutions for Water, Wastewater, and Storm Water Problems
4765 Highway 180 North • Hamilton, AL 35570
Phone (205) 921-2300 • Fax (205) 921-2301

TRAILS IMPROVEMENT PROJECT
ROCKY RAVINE PARK
CITY OF HALEYVILLE, ALABAMA

DWG. NO.
P1

SHEET 1 of 5

The Cassady Company, Inc.
Last Saved By: STHOMAS
Drawing File: C:\Users\the Cassady Company\Data - Documents\21131\Drawings\Survey\ROCKY RAVINE STAIRS 05-12-22.dwg
Layout: NORTH TRAIL
Date Plotted: 9/7/2022 8:13 AM

The Cassady Company, Inc.
Last Saved By: STHOMAS
Drawing File: C:\OneDrive\The Cassady Company\Data - Documents\21131\Drawings\Survey\ROCKY RAVINE STAIRS 05-12-22.dwg
Layout: SOUTH TRAIL
Date Plotted: 9/7/2022 8:13 AM

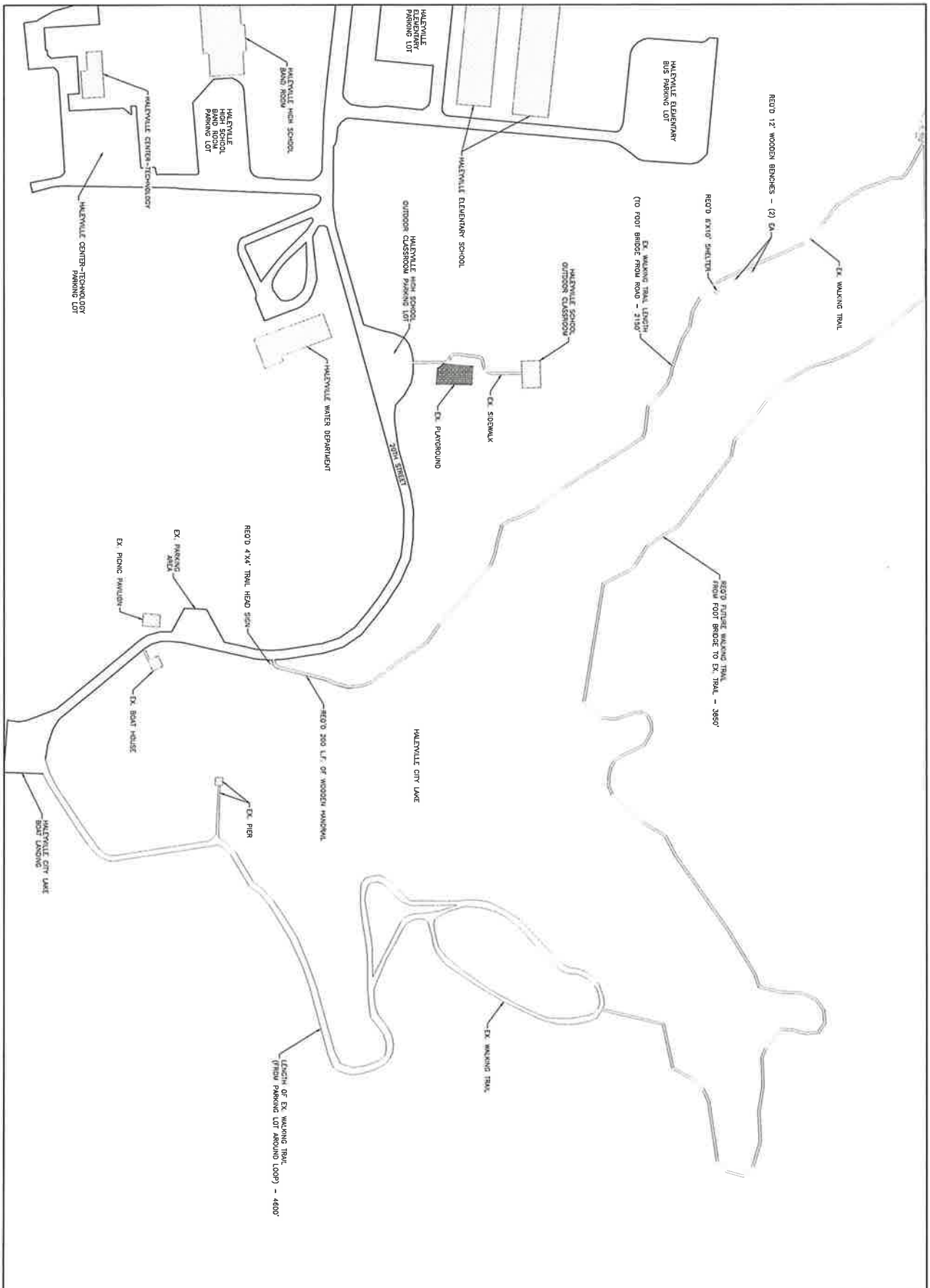

PRELIMINARY

DWG NO P2 SHEET 2 of 5	TRAILS IMPROVEMENT PROJECT ROCKY RAVINE PARK CITY OF HALEYVILLE, ALABAMA	The Cassady Company, Inc. Providing Solutions for Water, Wastewater, and Storm Water Problems	ROCKY RAVINE - SOUTH TRAIL

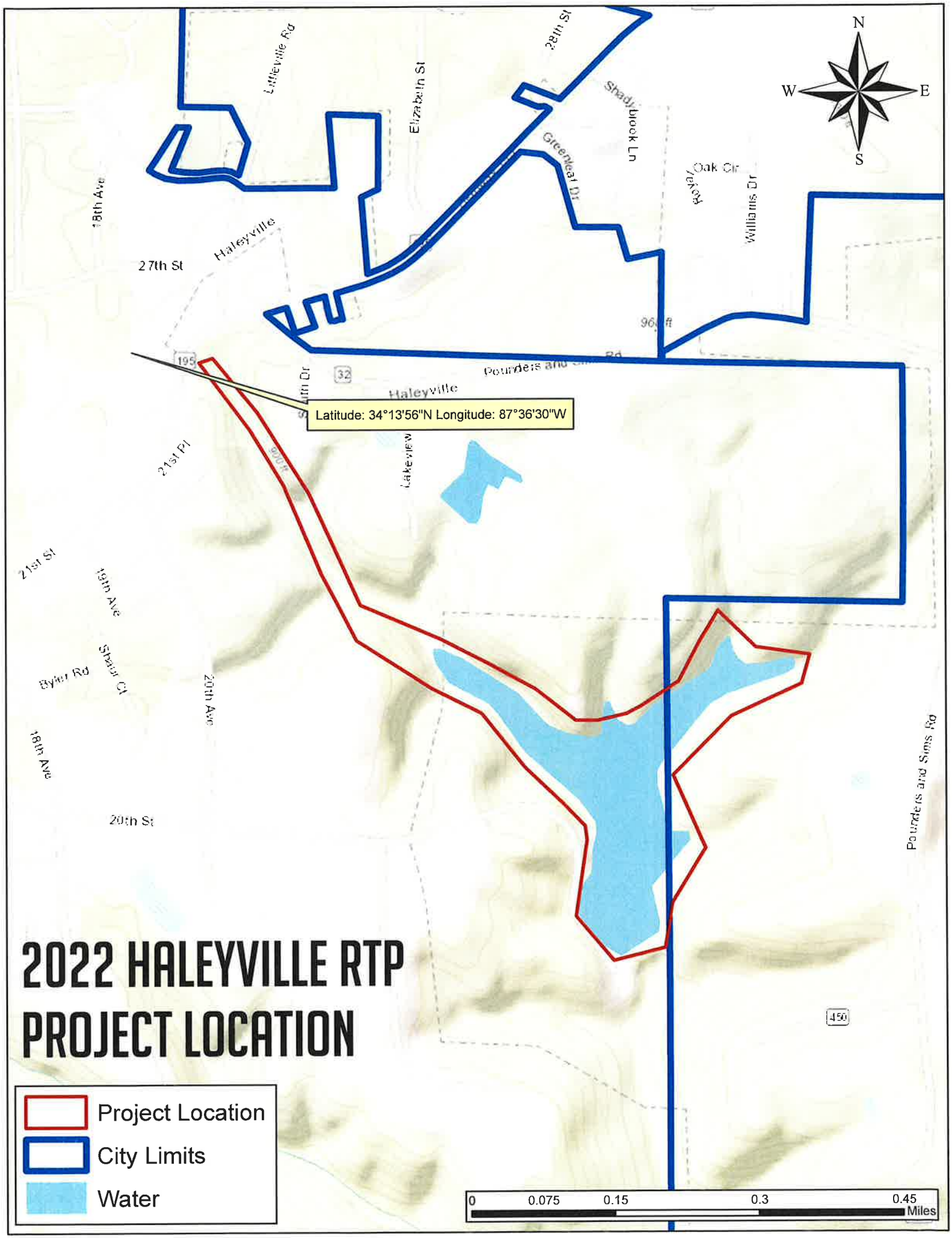
2022 HALEYVILLE RTP
PROJECT LOCATION
Latitude: 34°13'56"N Longitude: 87°36'30"W
Project Location
City Limits
Water
0
0.075
0.15
0.3
0.45
Miles
N
W
E
S
Littleville Rd
Elizabeth St
28th St
Shadybrook Ln
Greenleaf Dr
Royal Oak Cir
Williams Dr
18th Ave
Haleyville
27th St
195
32
Pounders and Sims Rd
Haleyville
21st Pl
Lakeview
21st St
19th Ave
Byler Rd
Shaun Ct
20th Ave
18th Ave
20th St
450

PROPERTY AREA BOUNDARY MAP

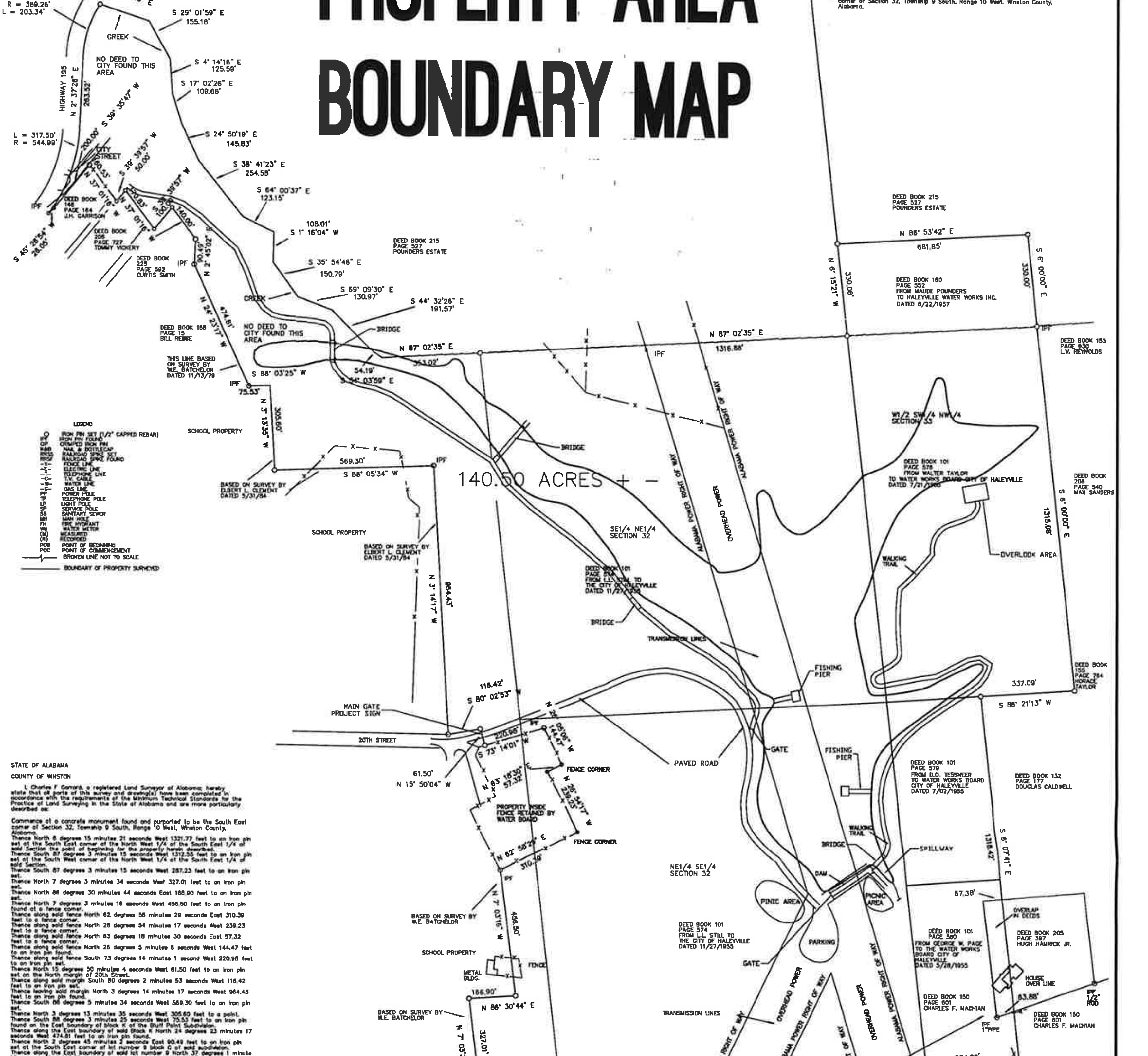

STATE OF ALABAMA

COUNTY OF WINSTON

I, Charles F. Garrard, a registered Land Surveyor of Alabama; hereby state that all parts of this survey and drawing(s) have been completed in accordance with the requirements of the Minimum Technical Standards for the Practice of Land Surveying in the State of Alabama and are more particularly described as:

Commence at a concrete monument found and purported to be the South East corner of Section 32, Township 9 South, Range 10 West, Winston County, Alabama.
Thence North 6 degrees 15 minutes 21 seconds West 1321.77 feet to an iron pin set at the South East corner of the North West 1/4 of the South East 1/4 of said Section the point of beginning for the property herein described.
Thence South 87 degrees 3 minutes 15 seconds West 1312.55 feet to an iron pin set at the South West corner of the North West 1/4 of the South East 1/4 of said Section.
Thence South 87 degrees 3 minutes 15 seconds West 287.23 feet to an iron pin set.
Thence North 7 degrees 3 minutes 34 seconds West 327.01 feet to an iron pin set.
Thence North 86 degrees 30 minutes 44 seconds East 166.90 feet to an iron pin set.
Thence North 7 degrees 3 minutes 16 seconds West 456.50 feet to an iron pin found at a fence corner.
Thence along said fence North 62 degrees 58 minutes 29 seconds East 310.39 feet to a fence corner.
Thence along said fence North 26 degrees 54 minutes 17 seconds West 239.23 feet to a fence corner.
Thence along said fence North 63 degrees 18 minutes 30 seconds East 57.32 feet to a fence corner.
Thence along said fence North 26 degrees 5 minutes 6 seconds West 144.47 feet to an iron pin found.
Thence along said fence South 73 degrees 14 minutes 1 second West 220.98 feet to an iron pin set.
Thence North 15 degrees 50 minutes 4 seconds West 61.50 feet to an iron pin set on the North margin of 20th Street.
Thence along said margin South 80 degrees 2 minutes 53 seconds West 116.42 feet to an iron pin set.
Thence leaving said margin North 3 degrees 14 minutes 17 seconds West 964.43 feet to an iron pin found.
Thence South 88 degrees 5 minutes 34 seconds West 569.30 feet to an iron pin set.
Thence North 3 degrees 13 minutes 35 seconds West 305.60 feet to a point.
Thence South 88 degrees 3 minutes 25 seconds West 75.53 feet to an iron pin found on the East boundary of block X of the Bluff Point Subdivision.
Thence along the East boundary of said Block X North 24 degrees 23 minutes 17 seconds West 474.81 feet to an iron pin found.
Thence North 2 degrees 45 minutes 2 seconds East 90.49 feet to an iron pin set at the South East corner of lot number 8 block G of said subdivision.
Thence along the East boundary of said lot number 8 North 37 degrees 1 minute 18 seconds West 140.00 feet to an iron pin set at the North East corner of said lot number 8.
Thence South 39 degrees 39 seconds 57 minutes West 100.00 feet to an iron pin set at the North West corner of said lot number 8 block G of said subdivision.
Thence North 37 degrees 1 minute 18 seconds West 170.83 feet to an iron pin set at the South East corner of lot number 12 block F of said subdivision.
Thence South 39 degrees 39 minutes 57 seconds West 50.00 feet to an iron pin set at the South West corner of said lot number 12.
Thence North 37 degrees 1 minute 18 seconds West 160.53 feet to an iron pin set at the North West corner of lot number 11 block F of said subdivision.
Thence along the North boundary of said block F South 39 degrees 35 minutes 47 seconds West 200.00 feet to an iron pin found at the North East corner of lot number 3 block F of said subdivision.
Thence continue along the North boundary of said block F South 45 degrees 28 minutes 54 seconds West 26.05 feet to an iron pin set on the East margin of highway number 195.
Thence along said margin and around a curve to the left with a radius of 544.99 feet and a length of 317.50 feet and a delta angle of 33 degrees 22 minutes 46 seconds to a Concrete monument found.
Thence continue along said margin North 2 degrees 37 minutes 26 seconds East 263.52 feet to a point.
Thence continue along said margin and around a curve to the right with a radius of 389.28 feet and a length of 203.34 feet and a delta angle of 29 degrees 55 minutes 48 seconds to an iron pin set in a creek.
Thence leaving said highway and along said creek as follows:
Thence South 71 degrees 21 minutes 19 seconds East 184.90 feet to a point.
Thence South 29 degrees 1 minute 59 seconds East 155.18 feet to a point.
Thence South 4 degrees 14 minutes 16 seconds East 125.59 feet to a point.
Thence South 17 degrees 2 minutes 26 seconds East 109.66 feet to a point.
Thence South 24 degrees 50 minutes 19 seconds East 145.83 feet to a point.
Thence South 38 degrees 41 minutes 23 seconds East 254.58 feet to a point.
Thence South 64 degrees 00 minutes 37 seconds East 123.15 feet to a point.
Thence South 1 degrees 16 minutes 04 seconds West 108.01 feet to a point.
Thence South 35 degrees 54 minutes 48 seconds East 150.79 feet to a point.
Thence South 69 degrees 09 minutes 30 seconds East 130.97 feet to a point.
Thence South 44 degrees 32 minutes 26 seconds East 191.57 feet to a point.
Thence South 34 degrees 03 minutes 59 seconds East 54.19 feet to a point.
Thence leaving said creek North 87 degrees 02 minutes 35 seconds East 353.02 feet to an iron pin set at the North West corner of the South East 1/4 of the North East 1/4 of said Section 32.
Thence along the North boundary of the South East 1/4 of the North East 1/4 of said Section 32, North 87 degrees 02 minutes 35 seconds East 1316.88 feet to an iron pin set at the North East corner of the South East 1/4 of the North East 1/4 of said Section 32.
Thence North 6 degrees 15 minutes 21 seconds West 330.08 feet to an iron pin set.
Thence North 88 degrees 53 minutes 42 seconds East 681.85 feet to an iron pin set.
Thence South 6 degrees 00 minutes 00 seconds East 330.00 feet to an iron pin found at the North East corner of the West 1/2 of South West 1/4 of the North West 1/4 of Section 33, Township 9 South, Range 10 West.
Thence South 6 degrees 00 minutes 00 seconds East 1315.08 feet to an iron pin set.
Thence South 86 degrees 21 minutes 13 seconds West 337.09 feet to an iron pin set.
Thence South 6 degrees 07 minutes 41 seconds East 1318.42 feet to an iron pin set.
Thence South 85 degrees 48 minutes 07 seconds West 334.02 feet to the point of beginning and containing 140.50 acres more or less.

According to my survey this 22nd day of December 1998.

Charles F. Garrard
Al. Reg. No. 20354

SURVEYORS NOTES

THIS SURVEY WAS PERFORMED FOR CITY OF HALEYVILLE FOR, THE SINGULAR PURPOSE OF LOCATING AND DESCRIBING THE BOUNDARY AROUND THE CITY LAKE AND ROCKY RAVINE PARK .
NO LIABILITY IS ASSUMED BY THE UNDERSIGNED FOR ANY LOSS THAT MAY BE ASSOCIATED WITH THE USE OF THIS SURVEY OTHER THAN FOR THE PURPORSE STATED ABOVE.

ACCEPTANCE OF THIS SURVEY PLAT OR USE OF THE CORNER MONUMENTS FOUND OR SET DURING THE PERFORMANCE OF THE FIELD SURVEY HEREBY LIMIT THE UNDERSIGNED LIABILITY RELATED TO PROFESSIONAL NEGLIGENT ACTS, ERRORS, OR OMISSIONS TO AN AMOUNT NOT EXCEED THE FEE CHARGED.

NO INVESTIGATION WAS MADE DURING THE PERFORMANCE OF THIS SURVEY TO DISCOVER EVIDENCE OF THE EXISTENCE OF ANY STRUCTURES WHICH MAY INDICATE THE LOCATION OF BURIED UTILITIES OR BURIED PIPELINES ON THIS PROPERTY. BURIED UTILITIES OR BURIED PIPELINES MAY OR MAY NOT EXIST. INSTERESTED PARTIES SHOULD INVESTIGATE THE EXISTENCE OF UNDERGROUND UTILITIES, IF ANY, AND VERIFY. NO LIABILITY IS ASSUMED BY THE UNDERSIGNED FOR ANY LOSS THAT MAY BE ASSOCIATED WITH THE EXISTENCE OF ANY BURIED UTILITIES OR BURIED PIPLINES ON THIS PROPERTY

UNLESS STATED OTHERWISE HEREON, THIS SURVEY WAS PREPARED WITHOUT THE BENEFIT OF ABSTRACT OF TITLE. NO LIABILITY IS ASSUMED BY THE UNDERSIGNED FOR LOSS RELATING TO ANY MATTER THAT MIGHT BE DISCOVERED BY AN ABSTRACT OR TITLE SEARCH OF THE PROPERTY.

THERE WAS NO REQUEST FOR OR ATTEMPT MADE TO LOCATE OR TO SHOW ON THIS PLAT ANY IMPROVEMENTS ON THIS LOT/TRACT OF LAND.

THERE WAS NO FIELD LOCATION ATTEMPTED TO DETERMINE THE LOCATION OF OR THE EXTENT OF A POSSIBLE ENCROACHMENT BENEATH THE SURFACE.
NO LIABILITY IS ASSUMED BY THE UNDERSIGNED FOR ANY LOSS THAT MAY BE ASSOCIATED WITH THE EXISTENCE OF ANY ENCROACHMENTS BENEATH THE SURFACE OF THIS PROPERTY

UNLESS STATED OTHERWISE, GOVERMENTAL JURISDICTIONAL AREAS OR NEGATIVE EASEMENT , IF ANY, WHICH MIGHT IMPACT ON THE USE OF THIS PROPERTY WERE NOT LOCATED. NO LIABILITY IS ASSUMED BY THE UNDERSIGNED FOR ANY LOSS RESULTING FROM THE EXERCISE OF ANY GOVERNMENTAL JURISDICTION AFFECTING THE USE OF THIS PROPERTY

UNLESS STATED OTHERWISE HEREON, ONLY EVIDENCE OF EASEMENTS OR STRUCTURES THERTO WHICH ARE READILY APPARENT FROM A CASUAL ABOVE GROUND VIEW OF THIS PROPERTY ARE SHOWN. NO LIABILITY IS ASSUMED BY THE UNDERSIGNED FOR LOSS RELATING TO THE EXISTENCE OF ANY EASEMENT NOT DISCOVERED FROM MY CASUAL ABOVE THE GROUND VIEW OF THIS PROPERTY.

NOTE:
On May 28th 1955 the City of Haleyville Alabama, in a deed from George W. Page received a tract of land containing 5 acres more or less, as recorded in deed book 101 page 580 in the office of probate of Winston County, Alabama. Said deed calling for the South 1/2 of the West 10 acres of the North West 1/4 of the South West 1/4 of Section 33, Township 9 South, Range 10 West, lying and being in Winston County, Alabama.
On March 4th, 1961 George W. Page deeded to A. F. Ray and wife Clois Ray a tract of land containing the 5 acre tract which had been previously deeded to the city of Haleyville, said tract being described as all south of barefoot Creek and hollow in North West 1/4 of South West 1/4, Section 33, Township 9, Range 10 West, except two acres, more or less, described as follows: commencing at the Southeast corner of said forty and running Thence west along forty line 1110 feet; Thence North parallel to east forty line 60 feet; Thence East parallel to South forty line 1110 feet to East forty line; Thence south along forty line 60 fee to point of beginning. Said deed being recorded in deed book 118 page 172 in the office of probate of Winston County, Alabama.
On the 11th day of April, 1977 A. F. Ray and wife Clois Ray deeded to Charles F. Machian and wife Joyce J. Machian the lands described in deed book 118 page 172 less and except the following described tract: begin at a point that is 1870 feet south 6 degrees 30 minutes east of South East corner of the North West 1/4 of North West 1/4 of Section 33, Township 9 South, Range 10 West, Winston County, Alabama. Thence continuing along the same line for a distance of 300 feet. Thence South 71 degrees 00 minutes West a distance of 1110 feet. Thence North 6 degrees 30 minutes east to the barefoot hollow. Thence in an easterly direction and along said hollow to the point of beginning.
Hugh Hamrick has a tract of land that laps into the 5 acre tract to the city of Haleyville described in deed book 101 page 580, as described in deed book 205 page 397 in the office of probate of Winston County, Alabama.

COPYRIGHT 1998 BY GARRARD LAND SURVEYING (CHARLES F. GARRARD).

200 0 200 400

GARRARD LAND SURVEYING

REF BEARING SCHOOL DEED

GARRARD LAND SURVEYING
2015 B 18TH AVENUE HALEYVILLE ALABAMA 35565
205-486-6916

BOUNDARY SURVEY FOR CITY OF HALEYVILLE

SCALE 1" = 200'	REVISED	DRAWN BY C GARRARD
DATE 12/23/98		APPROVED BY C.F.G.

PART OF SECTIONS 32 & 33 T9S R10W

WINSTON CO AL — DRAWING # 97-186 SHEET OF

Notice of Limitation of Use

The property identified in this deed has been acquired and/or developed with federal financial assistance provided by the National Park Service of the U.S. Department of the Interior in accordance with the Land and Water Conservation Fund Act of 1965, as amended, 16 U.S.C. 4601-5 et seq. (1970 ed.). Pursuant to a requirement of that law, this property may not be converted to other than public outdoor recreation uses (whether by transfer, sale, or in any other manner) without the express written approval of the Secretary of the Interior. By law, the Secretary shall approve such conversion only if he finds it to be in accord with then existing Statewide Comprehensive Outdoor Recreation Plan and only upon such conditions as he deems necessary to assure the substitution of other recreation properties of at least equal fair market value and of reasonably equivalent usefulness and location.

NOTE: LAKE TRAILS AND BRIDGES WERE CONSTRUCTED WITH NRTF FUNDS.
ROAD, LAKE, FISHING PIERS, DAM, AND SPLILLWAY WERE NOT BUILT WITH NRTF FUNDS.

M. Ray Boshell, Jr.
Mayor, City of Haleyville

Rocky Ravine Park
Haleyville City Lake Trails
Project No. ADECA-NRT-93(1)-Y055-1
As-Builts Prepared – 12/29/99

SAM
SYSTEM FOR AWARD MANAGEMENT

Ticket # INC-GSAFSD 5726449 1-31-2022

Ken Sunseri

ALERT: SAM.gov will be down for scheduled maintenance Saturday, 01/11/2020 from 8:00 AM to 1:00 PM

ALERT: The DFARS provision currently numbered 252.204-7022 will be updated to 252.204-7016 in SAM's next release. Additionally, the clause at paragraph (a) will be updated to reference 252.204-7018 instead of 252.204-YY.

Entity Dashboard

- Entity Overview
- Entity Registration
  - Core Data
  - Assertions
  - Reps & Certs
  - POCs
- Reports
  - Service Contract Report
  - BioPreferred Report
- Exclusions
  - Active Exclusions
  - Inactive Exclusions
  - Excluded Family Members

BACK TO USER DASHBOARD

Entity Overview

Entity Registration Summary

DUNS: 102077096
Name: Haleyville, City of
Doing Business As: City Hall
Business Type: US Local Government
Last Updated By: Ken Sunseri
Registration Status: Submitted
Registration passed IRS TIN match.
Registration is pending CAGE validation.

Exclusion Summary

Active Exclusion Records? No

GSA

Updated 1-2-2020

NACOLG
Northwest Alabama Council of Local Governments
P.O. Box 2603 Muscle Shoals, Alabama 35662

Keith Jones
Executive Director
kjones@nacolg.org

256-389-0500
256-389-0599 Fax

Sandra Burroughs
Chairman

Kerry Underwood
Vice Chairman

Andy Betterton
Secretary

August 26th, 2022

Lee Anne Wofford
Deputy SHPO
Alabama Historic Commission
ATTN: Section 106 Review
468 South Perry Street
Montgomery, AL 36103-0900

RE: City of Haleyville (Winston County)
Proposed FY2022 RTP Application – Rocky Ravine Park
Latitude: 34°13'56"N Longitude: 87°36'30"W

Dear Sir or Madam:

The City of Haleyville is seeking funding from the ADECA RTP to rehab and construct new trails at Rocky Ravine Park. The proposed work includes replacing rotten wood on staircases and walkways, new handrails, new access points, and new a trail connecting the city lake to the existing Rocky Ravine Park trail. All activities will be within the boundaries shown on the map included with this letter. During construction, "Best Management Practices" will be used to prevent siltation and sedimentation. As required by ADECA, we are requesting that your office review our proposal for preliminary environmental concurrence.

Please note attached topographic map, cost estimate, and photographs. Thank you for your assistance with this project.

Sincerely,

Robert (Beau) Cooper
NACOLG Recreational Planning

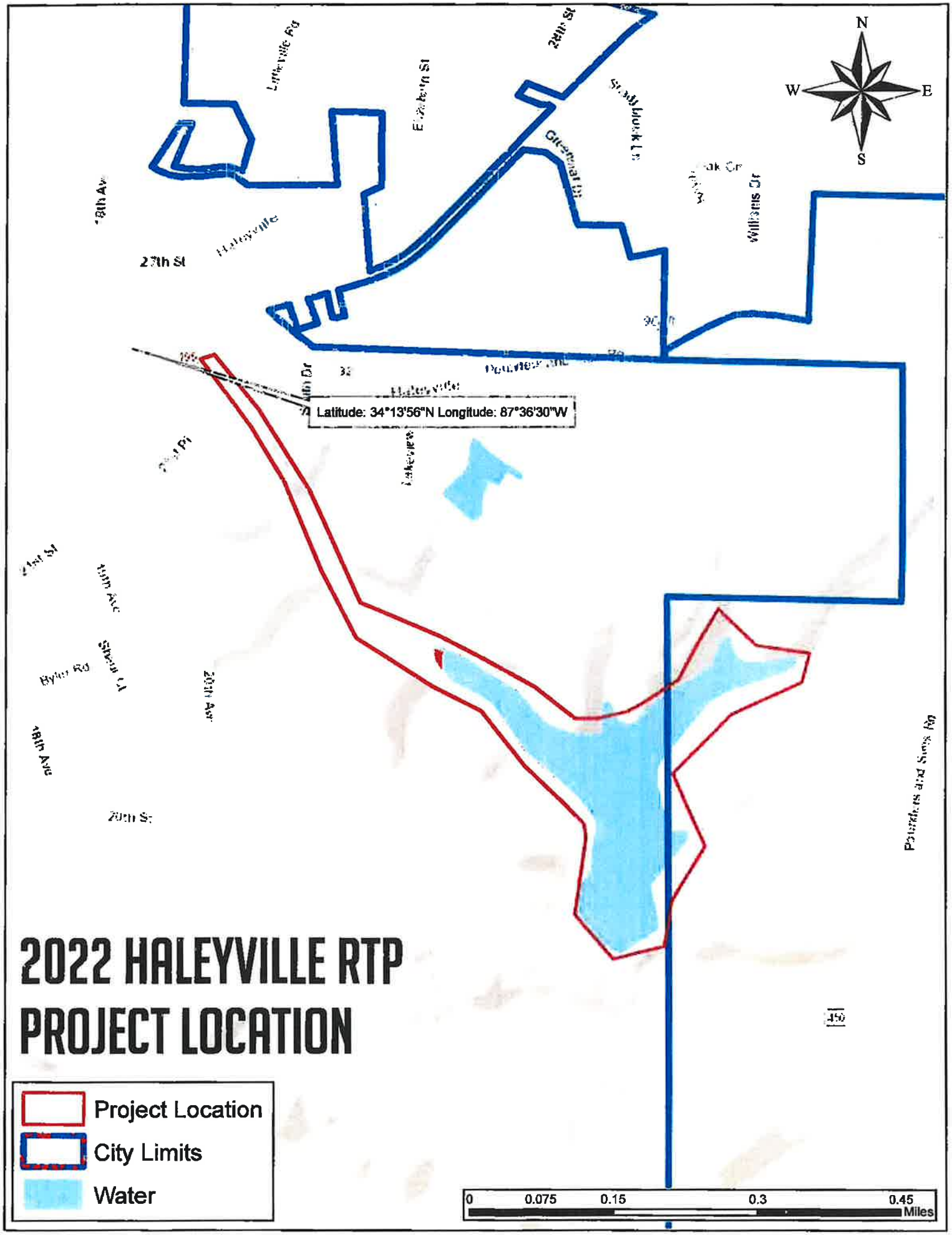

N
W
E
S
Latitude: 34°13'56"N Longitude: 87°36'30"W
27th St
Haleyville
Williams Dr
Byler Rd
20th Ave
18th Ave
20th St
Pounders and Sims Rd
450
2022 HALEYVILLE RTP
PROJECT LOCATION
Project Location
City Limits
Water
0
0.075
0.15
0.3
0.45
Miles

Trails Improvement Project
Rocky Ravine Park
City of Haleyville, Alabama

Project Cost Estimate

Item Number	Quantity	Unit	Item Description	Unit Cost	Total Cost
1	1.0	L.S.	Work Area #1 - Concrete Sidewalk (40' x 4')	$3,500.00	$3,500.00
2	1.0	L.S.	Work Area #2 - Replace Wooden Steps (8 Steps)	$2,400.00	$2,400.00
3	1.0	L.S.	Work Area #3 - Replace Wooden Steps (16 Steps)	$5,000.00	$5,000.00
4	1.0	L.S.	Work Area #4 - Construct Wooden Bridge (12' x 6')	$7,200.00	$7,200.00
5	1.0	L.S.	Work Area #5 - 15" HDPE Culvert (10')	$500.00	$500.00
6	1.0	L.S.	Work Area #6 - Replace Existing Wooden Bridge with Wooden Bridge (12' x 6')	$10,000.00	$10,000.00
7	1.0	L.S.	Work Area #7 - Clean, Seal, Install Slip Resistant Hardware Cloth	$2,500.00	$2,500.00
8	1.0	L.S.	Work Area #8 - Clean, Seal, Install Slip Resistant Hardware Cloth	$2,500.00	$2,500.00
9	1.0	L.S.	Work Area #9 - Clean, Seal, Install Slip Resistant Hardware Cloth	$2,500.00	$2,500.00
10	1.0	L.S.	Work Area #10 - Clean, Seal, Install Slip Resistant Hardware Cloth	$2,500.00	$2,500.00
11	1.0	L.S.	Work Area #11 - Clean, Seal, Install Slip Resistant Hardware Cloth	$2,500.00	$2,500.00
12	1.0	L.S.	Work Area #12 - Clean, Seal, Install Slip Resistant Hardware Cloth	$2,500.00	$2,500.00
13	1.0	L.S.	Work Area #13 - Clean, Seal, Install Slip Resistant Hardware Cloth	$2,500.00	$2,500.00
14	1.0	L.S.	Work Area #14 - Clean, Seal, Install Slip Resistant Hardware Cloth	$2,500.00	$2,500.00
15	1.0	L.S.	Work Area #15 - Clean, Seal, Install Slip Resistant Hardware Cloth and Replace Handrail	$3,000.00	$3,000.00
16	1.0	L.S.	Work Area #16 - Clean, Seal, Install Slip Resistant Hardware Cloth	$2,500.00	$2,500.00
17	1.0	L.S.	Work Area #17 - Clean, Seal, Install Slip Resistant Hardware Cloth and Replace Handrail	$3,000.00	$3,000.00
18	1.0	L.S.	Work Area #18 - Clean, Seal, Install Slip Resistant Hardware Cloth and Replace Handrail	$3,000.00	$3,000.00
19	1.0	L.S.	Work Area #19 - Clean, Seal, Install Slip Resistant Hardware Cloth and Replace Handrail	$3,000.00	$3,000.00
20	1.0	L.S.	Work Area #20 - Clean, Seal, Install Slip Resistant Hardware Cloth and Replace Handrail	$3,000.00	$3,000.00
21	1.0	L.S.	Work Area #21 - Clean, Seal, Install Slip Resistant Hardware Cloth	$2,500.00	$2,500.00
22	1.0	L.S.	Work Area #22 - Clean, Seal, Install Slip Resistant Hardware Cloth and Replace Handrail	$3,000.00	$3,000.00

Item Number	Quantity	Unit	Item Description	Unit Cost	Total Cost
23	1.0	L.S.	Work Area #23 - Clean, Seal, Install Slip Resistant Hardware Cloth	$3,000.00	$3,000.00
24	1.0	L.S.	Work Area #24 - Clean, Seal, Install Slip Resistant Hardware Cloth and Replace Handrail	$3,000.00	$3,000.00
25	1.0	L.S.	Work Area #25 - Clean, Seal, Install Slip Resistant Hardware Cloth and Replace Handrail	$3,000.00	$3,000.00
26	1.0	L.S.	Work Area #26 - Clean, Seal, Install Slip Resistant Hardware Cloth and Replace Seat and Handrail	$4,000.00	$4,000.00
27	1.0	L.S.	Work Area #27 - Replace Steps and Handrail (9 Steps)	$2,700.00	$2,700.00
28	1.0	L.S.	Work Area #28 - Replace Steps and Handrail (11 Steps) and Add Two Concrete Steps	$4,500.00	$4,500.00
29	2.0	Each	Trail Head Signs	$5,500.00	$11,000.00
30	8.0	Each	Benches - 2' x 12" x 12' Long, Sitting on Four 6" x 6" Posts	$1,000.00	$8,000.00
31	2.0	Each	Shelter	$2,500.00	$5,000.00
32	240.0	L.F.	Fence Around Concrete Basin (four board)	$20.00	$4,800.00
33	3,200.0	S.F.	Existing Bridges: Clean, Seal, Install Slip Resistant Hardware Cloth	$3.00	$9,600.00
34	450.0	L.F.	Walking Bridge	$190.00	$85,500.00
35	200.0	L.F.	Handrail at City Lake Entrance	$15.00	$3,000.00
				Subtotal	***$218,700.00***
				Engineering Design and Inspection (10%)	***$21,870.00***
				Subtotal	***$240,570.00***
				Administration (5%)	***$12,028.50***
				Total Estimated Project Cost	***$252,598.50***
				RTP GRANT FUNDING	*$200,000.00*
				CITY OF HALEYVILLE MATCH	*$52,298.00*

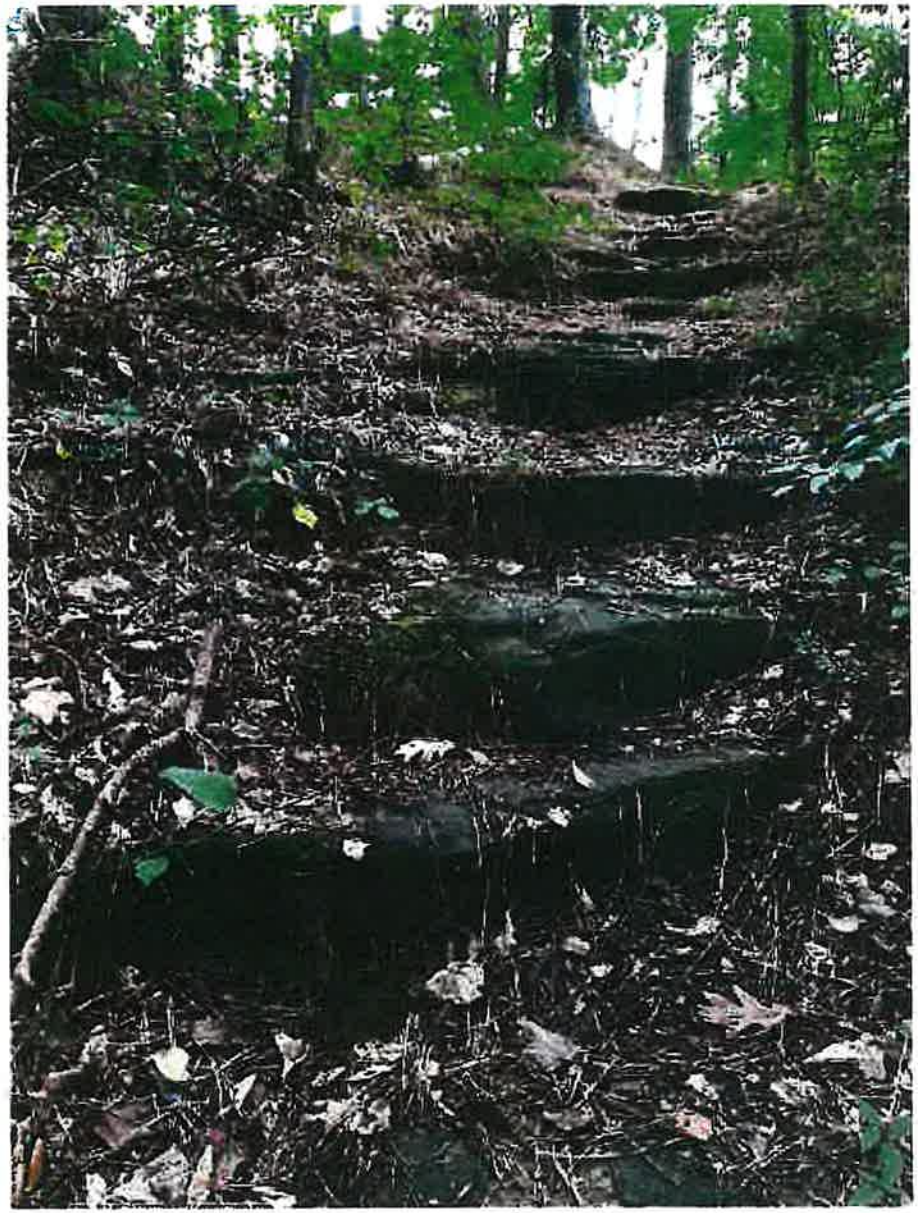

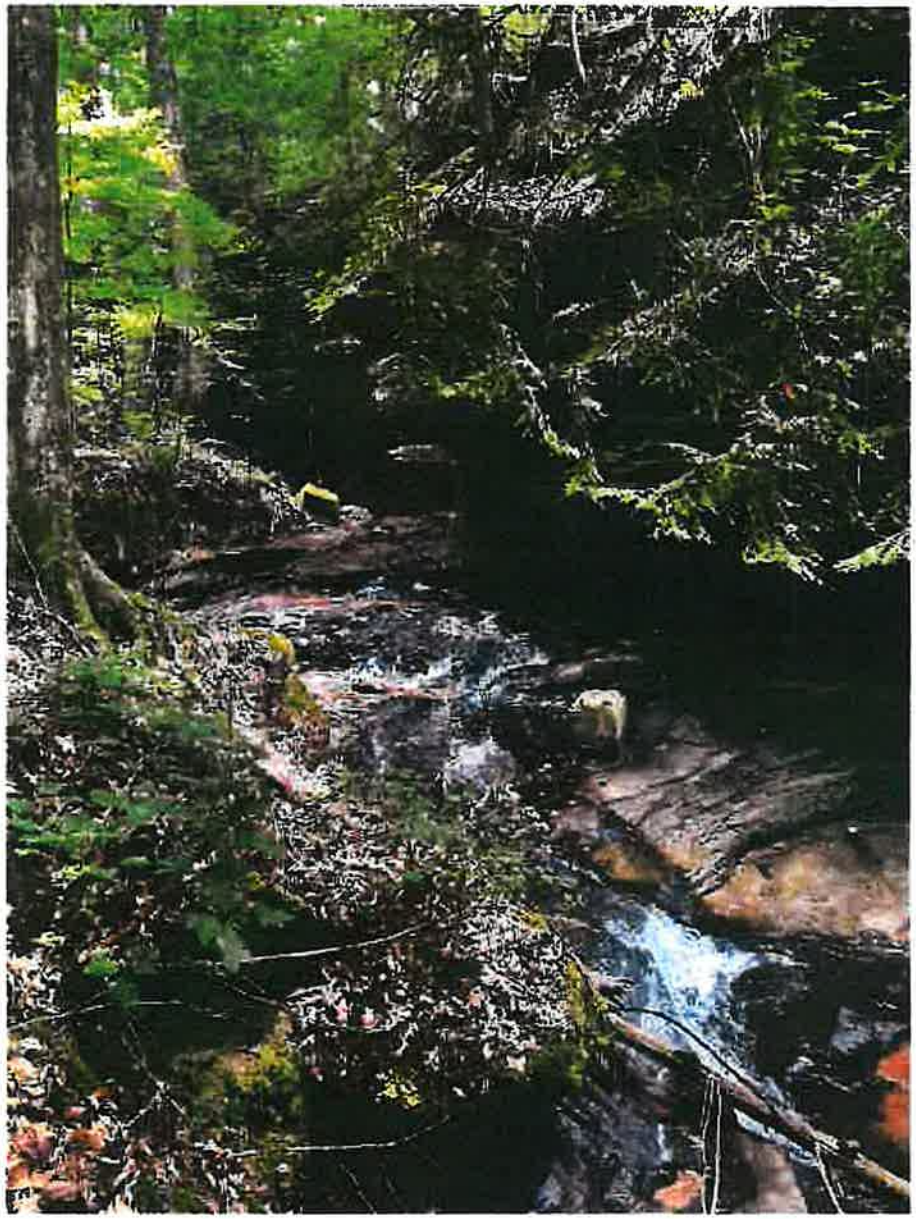

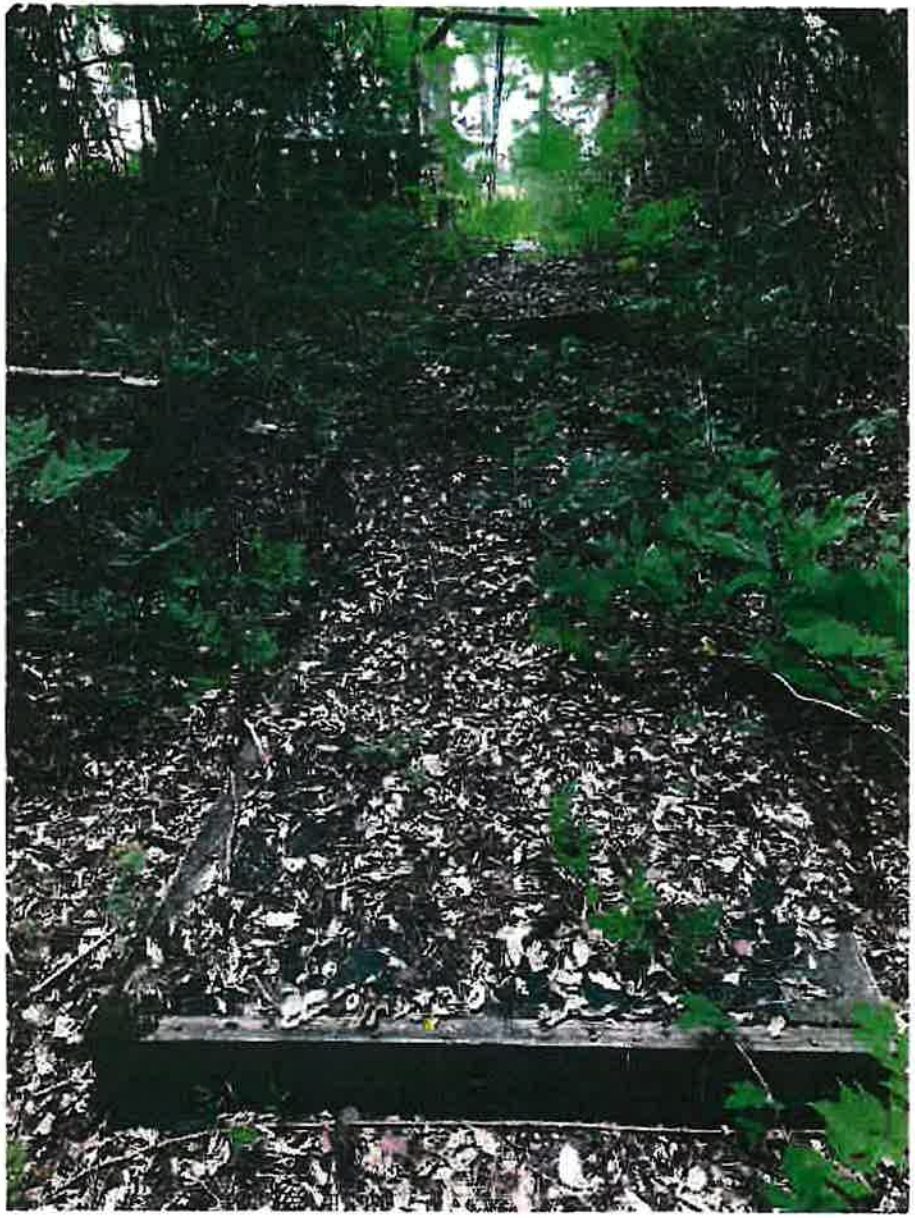

NACOLG
Northwest Alabama Council of Local Governments
P.O. Box 2603 Muscle Shoals, Alabama 35662

Keith Jones
Executive Director
kjones@nacolg.org

256-389-0500
256-389-0599 Fax

Sandra Burroughs
Chairman

Kerry Underwood
Vice Chairman

Andy Betterton
Secretary

August 29th, 2022

Mr. William J. Pearson
Field Supervisor
U.S. Fish and Wildlife Services
1208 B Main Street
Daphne, AL 36526-4419

RE: City of Haleyville (Winston County)
Proposed FY2022 RTP Application – Rocky Ravine Park
Latitude: 34°13'56"N Longitude: 87°36'30"W

Dear Sir or Madam:

The City of Haleyville is seeking funding from the ADECA RTP to rehab and construct new trails at Rocky Ravine Park. The proposed work includes replacing rotten wood on staircases and walkways, new handrails, new access points, and new a trail connecting the city lake to the existing Rocky Ravine Park trail. All activities will be within the boundaries shown on the map included with this letter. During construction, "Best Management Practices" will be used to prevent siltation and sedimentation. As required by ADECA, we are requesting that your office review our proposal for preliminary environmental concurrence.

Please note attached topographic map, cost estimate, and photographs. Thank you for your assistance with this project.

Sincerely,

Robert (Beau) Cooper
NACOLG Recreational Planning

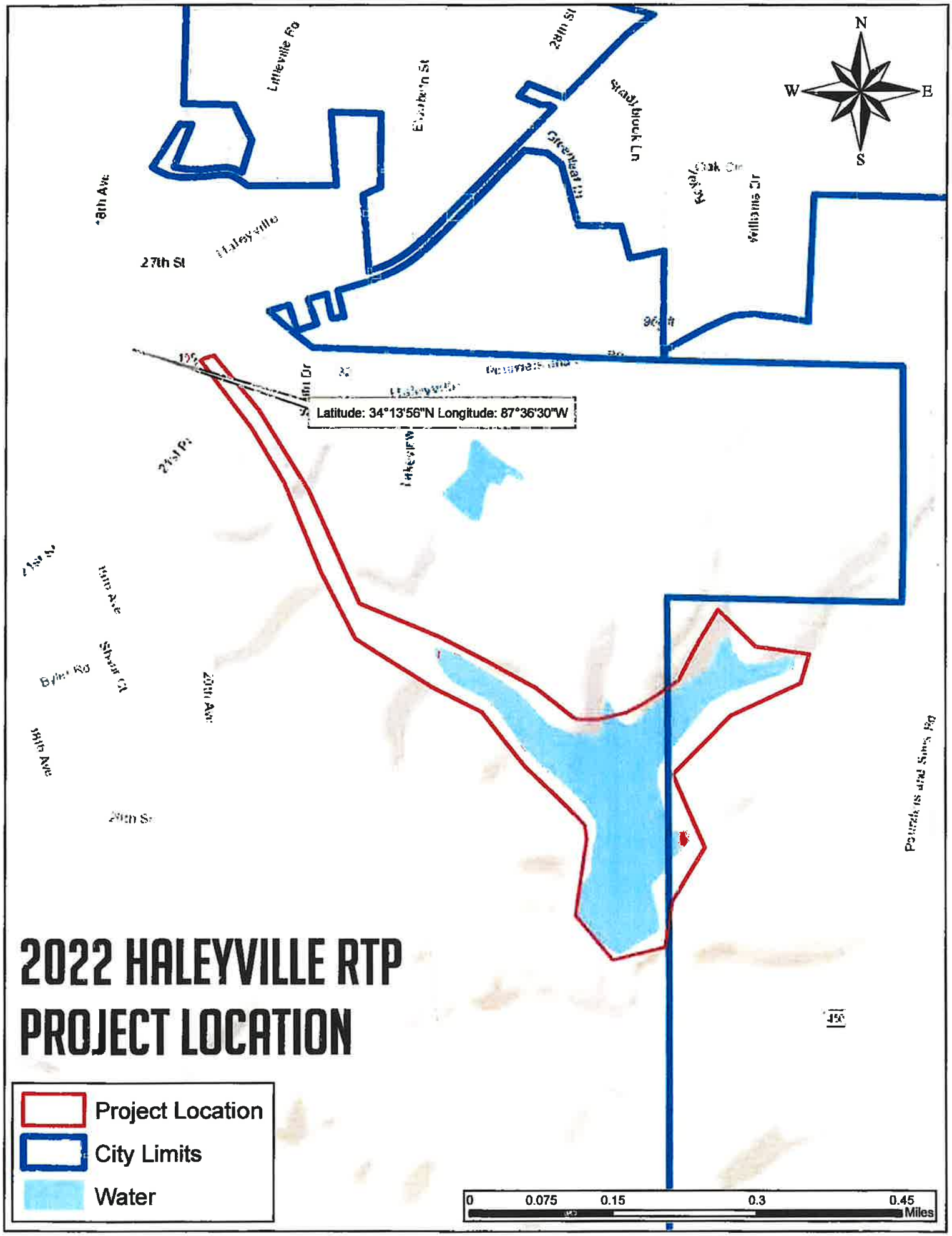

2022 HALEYVILLE RTP PROJECT LOCATION

Trails Improvement Project
Rocky Ravine Park
City of Haleyville, Alabama

Project Cost Estimate

Item Number	Quantity	Unit	Item Description	Unit Cost	Total Cost
1	1.0	L.S.	Work Area #1 - Concrete Sidewalk (40' x 4')	$3,500.00	$3,500.00
2	1.0	L.S.	Work Area #2 - Replace Wooden Steps (8 Steps)	$2,400.00	$2,400.00
3	1.0	L.S.	Work Area #3 - Replace Wooden Steps (16 Steps)	$5,000.00	$5,000.00
4	1.0	L.S.	Work Area #4 - Construct Wooden Bridge (12' x 6')	$7,200.00	$7,200.00
5	1.0	L.S.	Work Area #5 - 15" HDPE Culvert (10')	$500.00	$500.00
6	1.0	L.S.	Work Area #6 - Replace Existing Wooden Bridge with Wooden Bridge (12' x 6')	$10,000.00	$10,000.00
7	1.0	L.S.	Work Area #7 - Clean, Seal, Install Slip Resistant Hardware Cloth	$2,500.00	$2,500.00
8	1.0	L.S.	Work Area #8 - Clean, Seal, Install Slip Resistant Hardware Cloth	$2,500.00	$2,500.00
9	1.0	L.S.	Work Area #9 - Clean, Seal, Install Slip Resistant Hardware Cloth	$2,500.00	$2,500.00
10	1.0	L.S.	Work Area #10 - Clean, Seal, Install Slip Resistant Hardware Cloth	$2,500.00	$2,500.00
11	1.0	L.S.	Work Area #11 - Clean, Seal, Install Slip Resistant Hardware Cloth	$2,500.00	$2,500.00
12	1.0	L.S.	Work Area #12 - Clean, Seal, Install Slip Resistant Hardware Cloth	$2,500.00	$2,500.00
13	1.0	L.S.	Work Area #13 - Clean, Seal, Install Slip Resistant Hardware Cloth	$2,500.00	$2,500.00
14	1.0	L.S.	Work Area #14 - Clean, Seal, Install Slip Resistant Hardware Cloth	$2,500.00	$2,500.00
15	1.0	L.S.	Work Area #15 - Clean, Seal, Install Slip Resistant Hardware Cloth and Replace Handrail	$3,000.00	$3,000.00
16	1.0	L.S.	Work Area #16 - Clean, Seal, Install Slip Resistant Hardware Cloth	$2,500.00	$2,500.00
17	1.0	L.S.	Work Area #17 - Clean, Seal, Install Slip Resistant Hardware Cloth and Replace Handrail	$3,000.00	$3,000.00
18	1.0	L.S.	Work Area #18 - Clean, Seal, Install Slip Resistant Hardware Cloth and Replace Handrail	$3,000.00	$3,000.00
19	1.0	L.S.	Work Area #19 - Clean, Seal, Install Slip Resistant Hardware Cloth and Replace Handrail	$3,000.00	$3,000.00
20	1.0	L.S.	Work Area #20 - Clean, Seal, Install Slip Resistant Hardware Cloth and Replace Handrail	$3,000.00	$3,000.00
21	1.0	L.S.	Work Area #21 - Clean, Seal, Install Slip Resistant Hardware Cloth	$2,500.00	$2,500.00
22	1.0	L.S.	Work Area #22 - Clean, Seal, Install Slip Resistant Hardware Cloth and Replace Handrail	$3,000.00	$3,000.00

Item Number	Quantity	Unit	Item Description	Unit Cost	Total Cost
23	1.0	L.S.	Work Area #23 - Clean, Seal, Install Slip Resistant Hardware Cloth	$3,000.00	$3,000.00
24	1.0	L.S.	Work Area #24 - Clean, Seal, Install Slip Resistant Hardware Cloth and Replace Handrail	$3,000.00	$3,000.00
25	1.0	L.S.	Work Area #25 - Clean, Seal, Install Slip Resistant Hardware Cloth and Replace Handrail	$3,000.00	$3,000.00
26	1.0	L.S.	Work Area #26 - Clean, Seal, Install Slip Resistant Hardware Cloth and Replace Seat and Handrail	$4,000.00	$4,000.00
27	1.0	L.S.	Work Area #27 - Replace Steps and Handrail (9 Steps)	$2,700.00	$2,700.00
28	1.0	L.S.	Work Area #28 - Replace Steps and Handrail (11 Steps) and Add Two Concrete Steps	$4,500.00	$4,500.00
29	2.0	Each	Trail Head Signs	$5,500.00	$11,000.00
30	8.0	Each	Benches - 2' x 12" x 12' Long, Sitting on Four 6" x 6" Posts	$1,000.00	$8,000.00
31	2.0	Each	Shelter	$2,500.00	$5,000.00
32	240.0	L.F.	Fence Around Concrete Basin (four board)	$20.00	$4,800.00
33	3,200.0	S.F.	Existing Bridges: Clean, Seal, Install Slip Resistant Hardware Cloth	$3.00	$9,600.00
34	450.0	L.F.	Walking Bridge	$190.00	$85,500.00
35	200.0	L.F.	Handrail at City Lake Entrance	$15.00	$3,000.00
				Subtotal	***$218,700.00***
				Engineering Design and Inspection (10%)	***$21,870.00***
				Subtotal	***$240,570.00***
				Administration (5%)	***$12,028.50***
				Total Estimated Project Cost	***$252,598.50***
				RTP GRANT FUNDING	*$200,000.00*
				CITY OF HALEYVILLE MATCH	*$52,298.00*

NACOLG
Northwest Alabama Council of Local Governments
P.O. Box 2603 Muscle Shoals, Alabama 35662

Keith Jones
Executive Director
kjones@nacolg.org

256-389-0500
256-389-0599 Fax

Sandra Burroughs
Chairman

Kerry Underwood
Vice Chairman

Andy Betterton
Secretary

August 29th, 2022

Nashville District Corps of Engineers Chief
Regulatory Branch
U.S. Army Corps of Engineers
3701 Bell Road
Nashville, Tennessee 37214

RE: City of Haleyville (Winston County)
Proposed FY2022 RTP Application – Rocky Ravine Park
Latitude: 34°13'56"N Longitude: 87°36'30"W

Dear Sir or Madam:

The City of Haleyville is seeking funding from the ADECA RTP to rehab and construct new trails at Rocky Ravine Park. The proposed work includes replacing rotten wood on staircases and walkways, new handrails, new access points, and new a trail connecting the city lake to the existing Rocky Ravine Park trail. All activities will be within the boundaries shown on the map included with this letter. During construction, "Best Management Practices" will be used to prevent siltation and sedimentation. As required by ADECA, we are requesting that your office review our proposal for preliminary environmental concurrence.

Please note attached topographic map, cost estimate, and photographs. Thank you for your assistance with this project.

Sincerely,

Robert (Beau) Cooper
NACOLG Recreational Planning

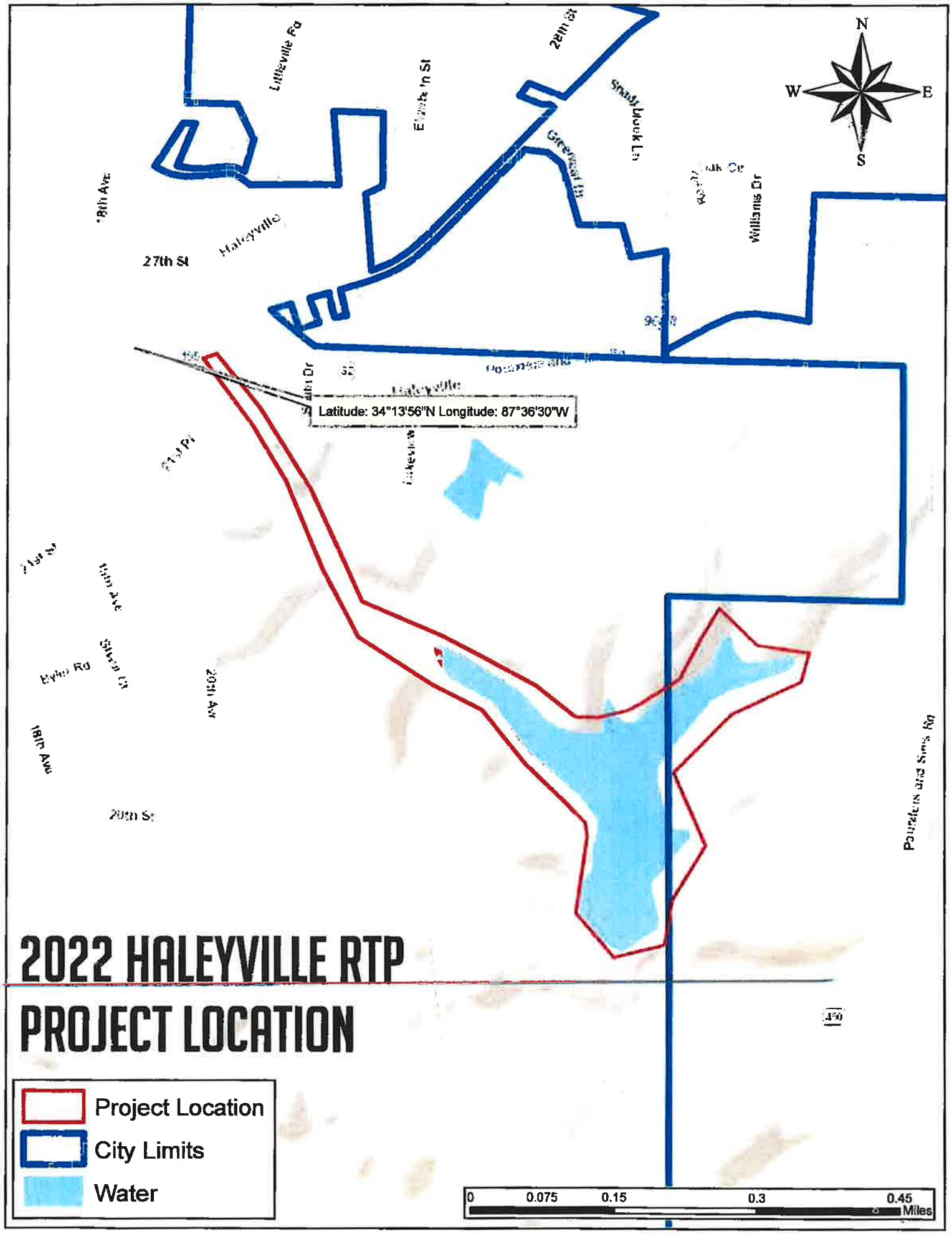

2022 HALEYVILLE RTP
PROJECT LOCATION
Latitude: 34°13'56"N Longitude: 87°36'30"W
N
S
E
W
Project Location
City Limits
Water
0
0.075
0.15
0.3
0.45
Miles
27th St
Haleyville
Williams Dr
Greenleaf Dr
Shady Brook Ln
Elizabeth St
Littleville Rd
18th Ave
20th Ave
20th St
Byler Rd
Pounders and Sims Rd

Trails Improvement Project
Rocky Ravine Park
City of Haleyville, Alabama

Project Cost Estimate

Item Number	Quantity	Unit	Item Description	Unit Cost	Total Cost
1	1.0	L.S.	Work Area #1 - Concrete Sidewalk (40' x 4')	$3,500.00	$3,500.00
2	1.0	L.S.	Work Area #2 - Replace Wooden Steps (8 Steps)	$2,400.00	$2,400.00
3	1.0	L.S.	Work Area #3 - Replace Wooden Steps (16 Steps)	$5,000.00	$5,000.00
4	1.0	L.S.	Work Area #4 - Construct Wooden Bridge (12' x 6')	$7,200.00	$7,200.00
5	1.0	L.S.	Work Area #5 - 15" HDPE Culvert (10')	$500.00	$500.00
6	1.0	L.S.	Work Area #6 - Replace Existing Wooden Bridge with Wooden Bridge (12' x 6')	$10,000.00	$10,000.00
7	1.0	L.S.	Work Area #7 - Clean, Seal, Install Slip Resistant Hardware Cloth	$2,500.00	$2,500.00
8	1.0	L.S.	Work Area #8 - Clean, Seal, Install Slip Resistant Hardware Cloth	$2,500.00	$2,500.00
9	1.0	L.S.	Work Area #9 - Clean, Seal, Install Slip Resistant Hardware Cloth	$2,500.00	$2,500.00
10	1.0	L.S.	Work Area #10 - Clean, Seal, Install Slip Resistant Hardware Cloth	$2,500.00	$2,500.00
11	1.0	L.S.	Work Area #11 - Clean, Seal, Install Slip Resistant Hardware Cloth	$2,500.00	$2,500.00
12	1.0	L.S.	Work Area #12 - Clean, Seal, Install Slip Resistant Hardware Cloth	$2,500.00	$2,500.00
13	1.0	L.S.	Work Area #13 - Clean, Seal, Install Slip Resistant Hardware Cloth	$2,500.00	$2,500.00
14	1.0	L.S.	Work Area #14 - Clean, Seal, Install Slip Resistant Hardware Cloth	$2,500.00	$2,500.00
15	1.0	L.S.	Work Area #15 - Clean, Seal, Install Slip Resistant Hardware Cloth and Replace Handrail	$3,000.00	$3,000.00
16	1.0	L.S.	Work Area #16 - Clean, Seal, Install Slip Resistant Hardware Cloth	$2,500.00	$2,500.00
17	1.0	L.S.	Work Area #17 - Clean, Seal, Install Slip Resistant Hardware Cloth and Replace Handrail	$3,000.00	$3,000.00
18	1.0	L.S.	Work Area #18 - Clean, Seal, Install Slip Resistant Hardware Cloth and Replace Handrail	$3,000.00	$3,000.00
19	1.0	L.S.	Work Area #19 - Clean, Seal, Install Slip Resistant Hardware Cloth and Replace Handrail	$3,000.00	$3,000.00
20	1.0	L.S.	Work Area #20 - Clean, Seal, Install Slip Resistant Hardware Cloth and Replace Handrail	$3,000.00	$3,000.00
21	1.0	L.S.	Work Area #21 - Clean, Seal, Install Slip Resistant Hardware Cloth	$2,500.00	$2,500.00
22	1.0	L.S.	Work Area #22 - Clean, Seal, Install Slip Resistant Hardware Cloth and Replace Handrail	$3,000.00	$3,000.00

Item Number	Quantity	Unit	Item Description	Unit Cost	Total Cost
23	1.0	L.S.	Work Area #23 - Clean, Seal, Install Slip Resistant Hardware Cloth	$3,000.00	$3,000.00
24	1.0	L.S.	Work Area #24 - Clean, Seal, Install Slip Resistant Hardware Cloth and Replace Handrail	$3,000.00	$3,000.00
25	1.0	L.S.	Work Area #25 - Clean, Seal, Install Slip Resistant Hardware Cloth and Replace Handrail	$3,000.00	$3,000.00
26	1.0	L.S.	Work Area #26 - Clean, Seal, Install Slip Resistant Hardware Cloth and Replace Seat and Handrail	$4,000.00	$4,000.00
27	1.0	L.S.	Work Area #27 - Replace Steps and Handrail (9 Steps)	$2,700.00	$2,700.00
28	1.0	L.S.	Work Area #28 - Replace Steps and Handrail (11 Steps) and Add Two Concrete Steps	$4,500.00	$4,500.00
29	2.0	Each	Trail Head Signs	$5,500.00	$11,000.00
30	8.0	Each	Benches - 2' x 12" x 12' Long, Sitting on Four 6" x 6" Posts	$1,000.00	$8,000.00
31	2.0	Each	Shelter	$2,500.00	$5,000.00
32	240.0	L.F.	Fence Around Concrete Basin (four board)	$20.00	$4,800.00
33	3,200.0	S.F.	Existing Bridges: Clean, Seal, Install Slip Resistant Hardware Cloth	$3.00	$9,600.00
34	450.0	L.F.	Walking Bridge	$190.00	$85,500.00
35	200.0	L.F.	Handrail at City Lake Entrance	$15.00	$3,000.00
				Subtotal	***$218,700.00***
				Engineering Design and Inspection (10%)	***$21,870.00***
				Subtotal	***$240,570.00***
				Administration (5%)	***$12,028.50***
				Total Estimated Project Cost	***$252,598.50***
				RTP GRANT FUNDING	*$200,000.00*
				CITY OF HALEYVILLE MATCH	*$52,298.00*

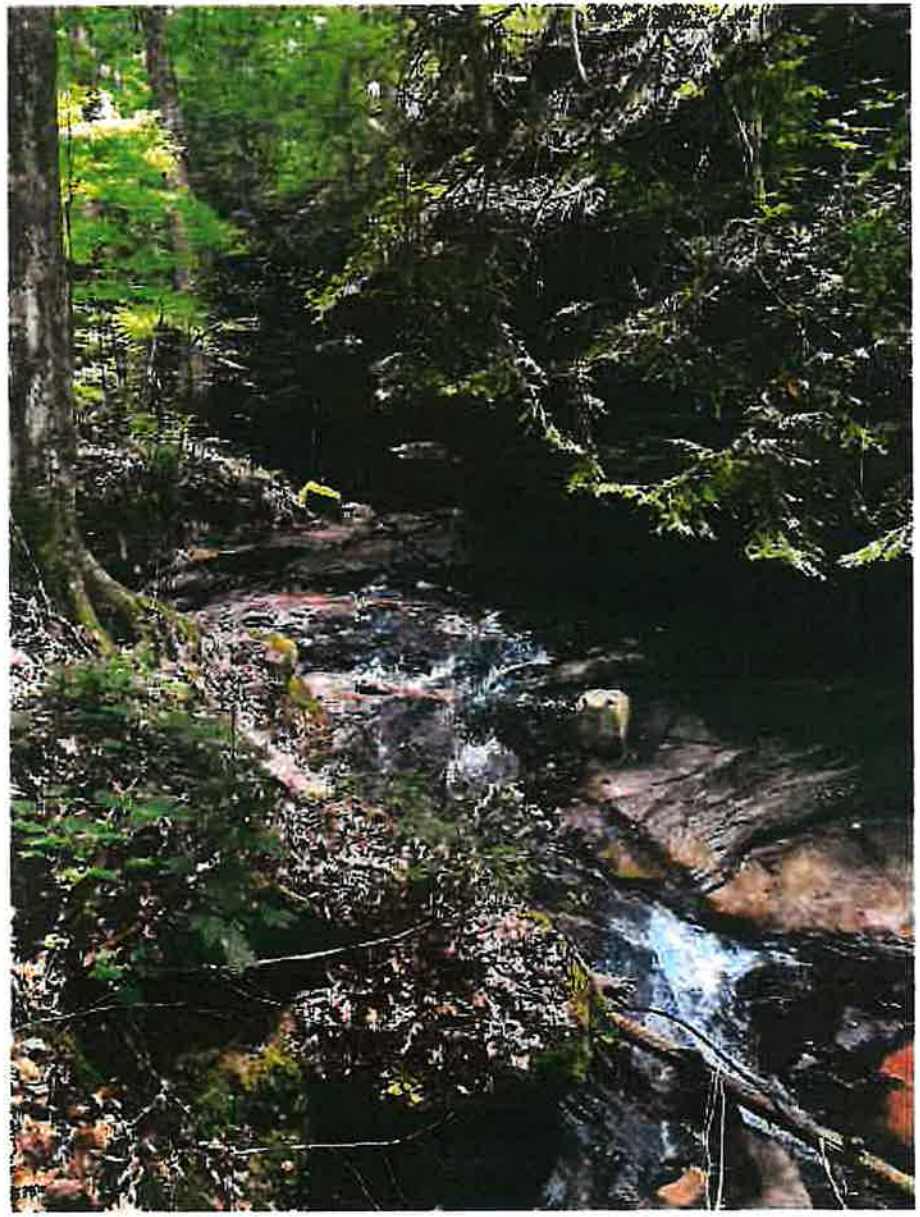

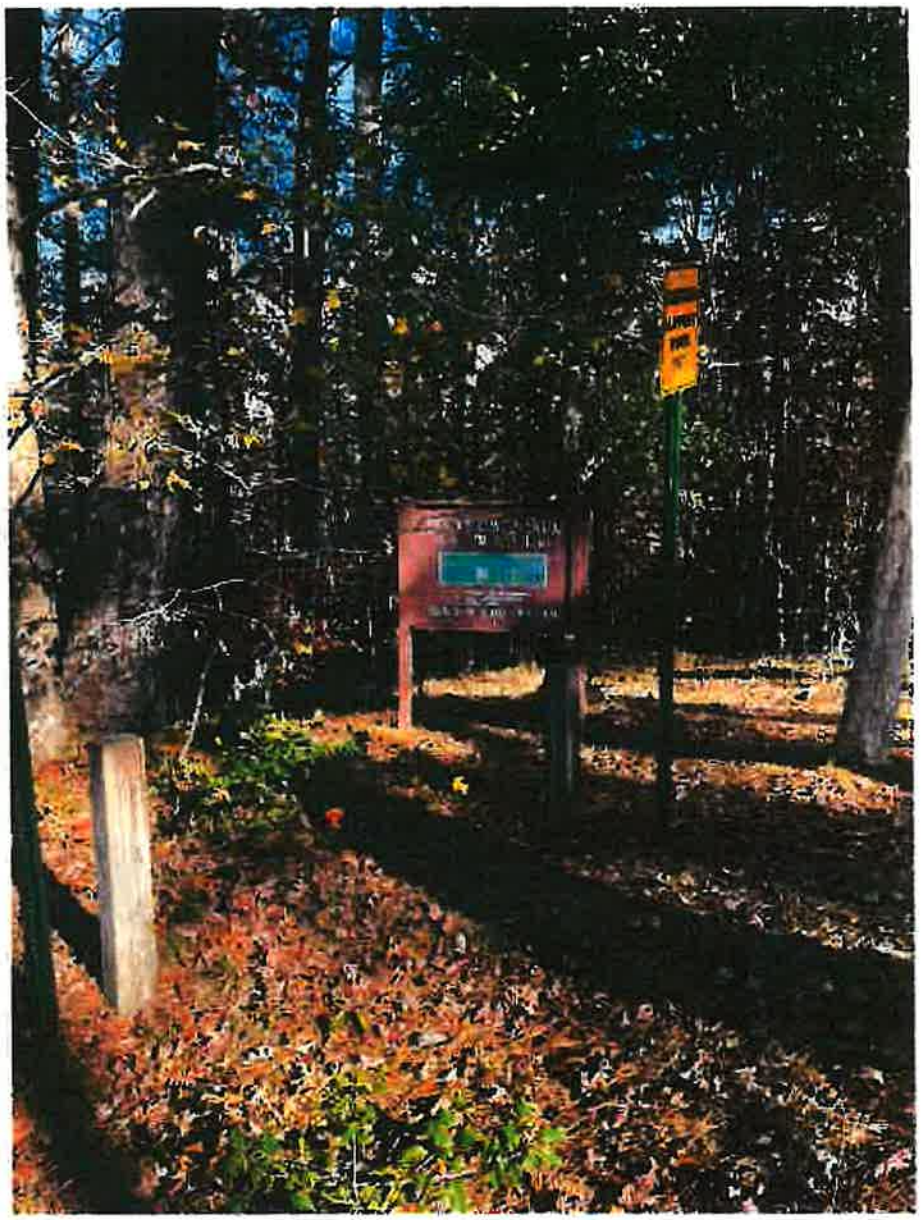

NACOLG
Northwest Alabama Council of Local Governments
P.O. Box 2603
Muscle Shoals, Alabama 35662

FIRST-CLASS
US POSTAGE PITNEY BOWES
ZIP 35661
02 7H
0001350978
$ 000.81⁰
SEP 07 2022

US Army Corp of Engineers
3701 Bell Rd.
Nashville, TN 37214

NACOLG
Northwest Alabama Council of Local Governments
P.O. Box 2603
Muscle Shoals, Alabama 35662

FIRST-CLASS
US POSTAGE PITNEY BOWES
ZIP 35661
02 7H
0001350978
$ 000.81⁰
SEP 07 2022

William J. Pearson
c/o US Fish + Wildlife
1208 B. Main St.
Daphne, AL 36526

NACOLG
Northwest Alabama Council of Local Governments
P.O. Box 2603
Muscle Shoals, Alabama 35662

FIRST-CLASS
US POSTAGE PITNEY BOWES
ZIP 35661
02 7H
0001350978
$ 000.81⁰
SEP 07 2022

Lee Anne Wofford
c/o
Alabama Historical Commission
ATTN: 106 Review
468 South Perry St.
Montgomery, AL 36103

This instrument prepared by:

James & Lowe, Attorneys at Law
P. O. Box 576
Haleyville, Alabama 35565

Send Tax Notice to:

City of Haleyville
Haleyville, Alabama 35565

VOL 173 PAGE 751

Mail gov.

1985 FEB -5 AM 10: 19
BILLY C. FORD
JUDGE OF PROBATE

STATE OF ALABAMA)
)
WINSTON COUNTY)

1451

QUITCLAIM DEED

KNOW ALL MEN BY THESE PRESENTS, That for and in consideration of the sum of Ten Dollars ($10.00) and other valuable consideration, in hand paid to the undersigned, the receipt whereof is hereby acknowledge, the undersigned hereby releases, quitclaims, grants, sells, and conveys to The City of Haleyville, Alabama, a Municipal Corporation, (hereinafter called Grantee), all her right, title, interest, and claim in or to the following described real estate, situated in Winston County, Alabama, to-wit:

Beginning at the SW corner of SW¼ of NE¼, Section 32, Township 9 South, Range 10 West; thence S 00°09' W a distance of 264 feet; thence N 88°33' W a distance of 660 feet; thence N 00°09' W a distance of 264 feet; thence S 88°33' E a distance of 37.7 feet; thence N 00°09' W a distance of 80.7 feet; thence N 20°43' W a distance of 571.7 feet; thence N 47°23' E a distance of 532.7 feet; thence S 88°56' E a distance of 457 feet to the East right-of-way line of a paved street; thence N 20°01'W along said East right-of-way line a distance of 262.2 feet; thence N 70°02' E a distance of 169.7 feet; thence S 88°53' E a distance of 322.3 feet; thence S 00°10' E a distance of 305.6 feet; thence S 88°53' E a distance of 570 feet; thence S 00°10' E a distance of 990 feet to the South boundary line of said SW¼ of NE¼; thence N 88°33' W along said South boundary line a distance of 990 feet to the point of beginning, containing 45 acres, more or less, lying and being situated in Section 32, Township 9 South, Range 10 West, Winston County, Alabama.

TO HAVE AND TO HOLD to said Grantee forever.

Given under my hand and seal, this 23rd day of November, 1984.

Tommie Lou Robinson (Seal)
Tommie Lou Robinson

STATE OF ALABAMA)
WINSTON COUNTY)

I, the undersigned authority, a Notary Public in and for said County in said State, hereby certify that Tommie Lou Robinson, whose name is signed to the foregoing conveyance, and who is known to me, acknowledged before me on this day that being informed of the contents of the conveyance, she executed the same voluntarily on the day the same bears date.

Given under my hand and official seal, this 23rd day of November, 1984.

$2.50 rec fee

Mary Lou Arnold
Notary Public

This instrument was prepared by:

J. Shane Cook
Jackson, Mays & McNutt LLC
P.O. Box 819
Haleyville, AL 35565
-jh-

Send Tax Notice to:

Recorded In DEED BK 250 PG 960, 12/11/2003 09:04:09 AM
Casandra Horsley, Probate Judge, Winston County, AL

Deed Tax 1.00, Recording Fee 16.00, TOTAL 17.00

CORPORATION WARRANTY DEED

STATE OF ALABAMA)

KNOW ALL MEN BY THESE PRESENTS:

COUNTY OF WINSTON)

That in consideration of **TEN DOLLARS AND OTHER VALUABLE CONSIDERATIONS** to the undersigned grantors, **THE CITY OF HALEYVILLE, A MUNICIPAL CORPORATION** (herein referred to as **GRANTOR**), in hand paid by the **GRANTEE** herein, the receipt of which is hereby acknowledged, the said **GRANTOR** does by these presents, grant, bargain, sell and convey unto **THE CITY OF HALEYVILLE, A MUNICIPAL CORPORATION** (herein referred to as **GRANTEES**), the following described real estate situated in **WINSTON** County, Alabama, to-wit:

Commence at an iron pin set (12/22/98) and purported to be the Southeast corner of the Northwest 1/4 of the Southeast 1/4 of Section 32, Township 9 South, Range 10 West, Winston County, Alabama.
Thence North 6 degrees, 15 minutes, 20 seconds West 450.00 feet to the point of beginning for the property herein described.
Thence South 87 degrees, 03 minutes, 15 seconds West 375.39 feet to a point,
Thence North 9 degrees, 04 minutes 48 seconds West 108.61 feet to a point on the West edge of the pavement of a paved road,
thence Along the said edge of the pavement as follows,
Thence North 9 degrees, 04 minutes, 48 seconds West, 79.52 feet to a point,
Thence North 35 degrees, 54 minutes, 17 seconds West 175.99 feet to a point,
Thence North 52 degrees, 39 minutes, 03 seconds West 119.54 feet to a point,
Thence North 6 degrees, 21 minutes, 37 seconds West 118.57 feet to a point,
Thence North 6 degrees, 32 minutes, 12 seconds East 82.92 feet to a point,
Thence North 4 degrees, 07 minutes, 15 seconds East 134.26 feet to a point,
Thence North 20 degrees, 09 minutes, 43 seconds West 144.77 feet to a point,
Thence North 62 degrees, 13 minutes, 57 seconds West 226.69 feet to a point,
Thence South 87 degrees, 14 minutes, 24 seconds West 135.71 feet to a point,
Thence South 67 degrees, 54 minutes, 14 seconds West 225.29 feet to a point,
Thence South 68 degrees, 53 minutes, 37 seconds West 375.00 feet to a point,
Thence leaving said edge of pavement North 15 degrees, 50 minutes, 04 seconds West 33.82 feet to an iron pin set (12/22/98) on the North margin of 20th Street,
Thence along said margin South 80 degrees, 02 minutes, 53 seconds West 116.42 feet to an iron pin set (12/22/98),
Thence leaving the North margin of 20th Street North 3 degrees, 14 minutes, 17 seconds West 500.00 feet to a point,
Thence North 68 degrees, 29 minutes, 21 seconds East 562.02 feet to a point,
Thence North 68 degrees, 00 minutes, 12 seconds West 267.48 feet to a point,
Thence North 41 degrees, 23 minutes, 30 seconds West 328.44 feet to a point,
Thence North 27 degrees, 04 minutes, 00 seconds West 196.65 feet to a point,

16.00-recording
1.00-deed tax
17.00

5

Thence North 70 degrees, 50 minutes, 25 seconds West 297.61 feet to a point,
Thence North 57 degrees, 02 minutes, 30 seconds West 106.32 feet to a point,
Thence North 33 degrees, 00 minutes, 34 seconds West 106.22 feet to a point in the center of a creek,
Thence along the center of said creek South 44 degrees, 32 minutes, 26 seconds East 124.49 feet to a point,
Thence continue along the center of said creek South 54 degrees, 03 minutes, 59 seconds East 54.19 feet to a point,
Thence leaving said creek North 87 degrees, 02 minutes, 35 seconds East 353.02 feet to an iron pin set (12/22/98),
Thence North 87 degrees, 02 minutes, 35 seconds East 1316.88 feet to an iron pin set (12/22/98),
Thence North 6 degrees, 15 minutes, 21 seconds West 330.08 feet to an iron pin set (12/22/98),
Thence North 86 degrees, 53 minutes, 42 seconds East 681.85 feet to an iron pin set (12/22/98)
Thence South 6 degrees, 00 minutes, 00 seconds East 330.00 feet to an iron pin set (12/22/98),
Thence South 6 degrees, 00 minutes, 00 seconds East 1315.08 feet to an iron pin set (12/22/98),
Thence South 86 degrees, 21 minutes, 13 seconds West 337.09 feet to an iron pin set (12/22/98),
Thence South 51 degrees, 52 minutes, 44 seconds West 396.50 feet to a point,
Thence South 6 degrees, 15 minutes, 20 seconds East 647.10 feet to the point of beginning and containing 79.02 acres more or less.

The above description taken from that certain deed executed by the Haleyville Water & Sewer to The City of Haleyville, a municipal Corporation

NOTICE OF LIMITATION OF USE: This property has been acquired or developed with Federal assistance provided by the National Park Service of the U.S. Department of the Interior in accordance with the Land and Water Conservation Fund Act of 1965, as amended, 16 U.S.C. 4601-5 et sec. (1970 ed). Pursuant to a requirement of that law, this property may not be converted to other than public outdoor recreation uses (whether by transfer, sale or in any other manner) without the express written approval of the Secretary of the Interior. By law, the Secretary shall approve such conversion only if he finds it to be in accord with the then existing comprehensive statewide outdoor recreation plan and only upon such conditions as he deems necessary to assure the substitution of other recreation properties of at least equal fair market value and or reasonably equivalent usefulness and location.

A COPY OF SURVEY ATTACHED HERETO AND MADE A PART HEREOF AS IF SET OUT HEREIN IN FULL

TO HAVE AND TO HOLD to the said **GRANTEE** its heirs and assigns forever.

And said **GRANTOR** does for itself, its successors and assigns, covenant with said **GRANTEE**, its heirs and assigns, that it is lawfully seized in fee simple of said premises, that they are free from all encumbrances, that it has a good right to sell and convey the same as aforesaid, and that it will and its successors and assigns shall, warrant and defend the same to the said

DEED 250 961

GRANTEES, its heirs, executors and assigns forever, against the lawful claims of all persons.

IN WITNESS WHEREOF, the said **GRANTOR,** by its **Mayor, Larry Albright** who is authorized to execute this conveyance, has hereto set his signature and seal, this the 4 day of Dec., 2003.

DEED 250 962

THE CITY OF HALEYVILLE, A MUNICIPAL CORPORATION

By Its: Larry Albright
MAYOR, LARRY ALBRIGHT

STATE OF ALABAMA)

COUNTY OF WINSTON)

I, the undersigned authority, a Notary Public in and for said County in said State, hereby certify that **Larry Albright, as Mayor of the City of Haleyville, a Municipal Corporation,** is signed to the foregoing conveyance, and who is known to me, acknowledged before me on this day that, being informed of the contents of the conveyance, he, as such officer and with full authority, executed the same voluntarily for and as the act of said corporation.

Given under my hand and official seal, this the 4th day of December, 2003.

Debra Hood
Notary Public
My Commission Expires:

NOTARY PUBLIC STATE OF ALABAMA AT LARGE
MY COMMISSION EXPIRES: Sep 15, 2007
BONDED THRU NOTARY PUBLIC UNDERWRITERS

C:\MyFiles\Deeds\Haleyville Water and Sewer Board to City of Haleyville wpd

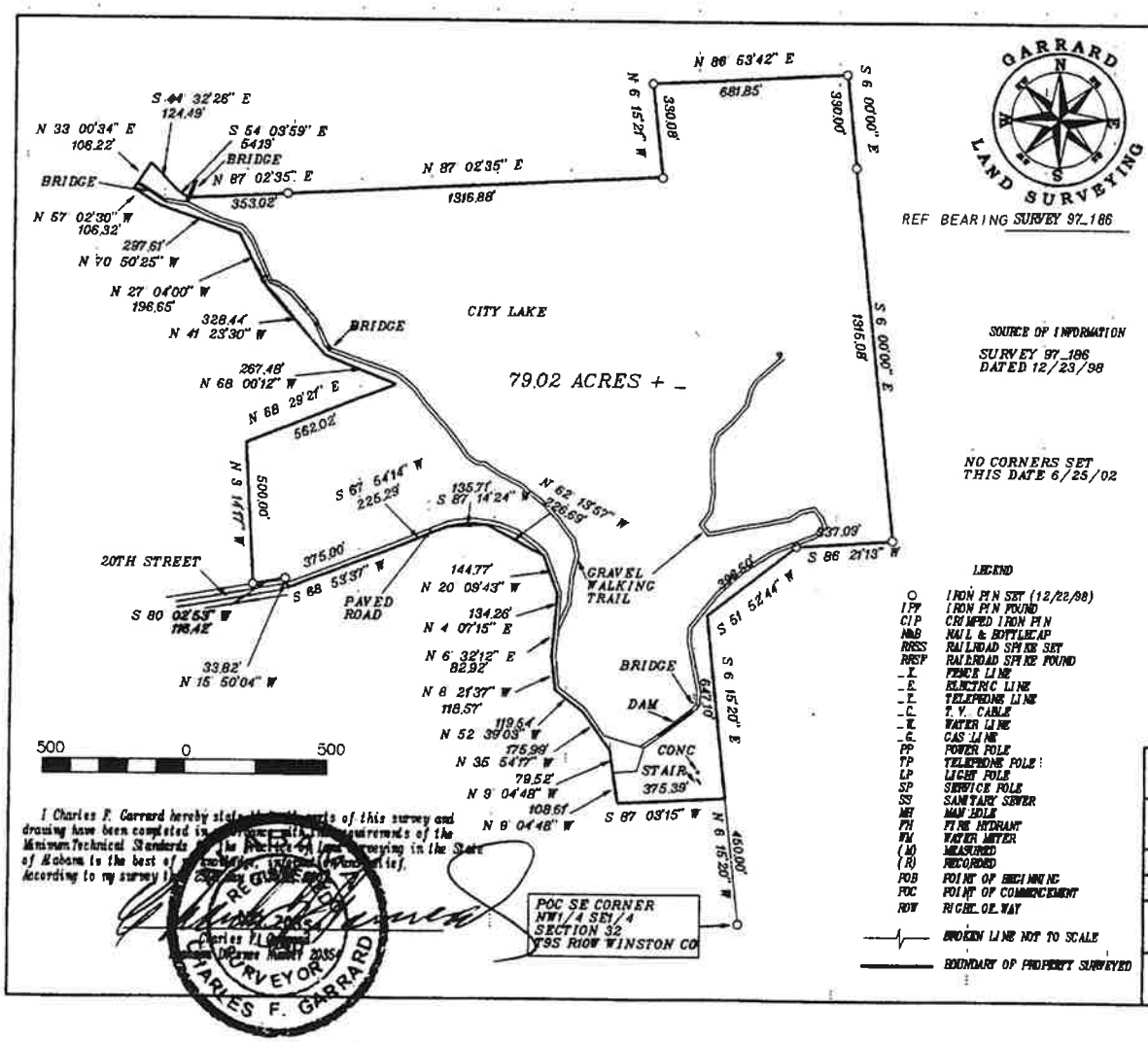

I Charles F. Garrard hereby state that the results of this survey and drawing have been completed in accordance with the requirements of the Minimum Technical Standards for the Practice of Land Surveying in the State of Alabama to the best of my knowledge, information and belief. According to my survey this the 25th day of June, 2002.

Charles F. Garrard
Alabama Reg. No. 11811 2035

CHARLES F. GARRARD
RC GARRARD
LAND SURVEYOR
2035

GARRARD LAND SURVEYING

REF BEARING SURVEY 97_186

SOURCE OF INFORMATION

SURVEY 97_186
DATED 12/23/98

NO CORNERS SET
THIS DATE 6/25/02

LEGEND

O	IRON PIN SET (12/22/98)
IPF	IRON PIN FOUND
CIP	CRIMPED IRON PIN
N&B	NAIL & BOTTLECAP
RRSS	RAILROAD SPIKE SET
RRSF	RAILROAD SPIKE FOUND
_F_	FENCE LINE
_E_	ELECTRIC LINE
_T_	TELEPHONE LINE
_C_	T. V. CABLE
_W_	WATER LINE
_G_	GAS LINE
PP	POWER POLE
TP	TELEPHONE POLE
LP	LIGHT POLE
SP	SERVICE POLE
SS	SANITARY SEWER
MH	MAN HOLE
FH	FIRE HYDRANT
WM	WATER METER
(M)	MEASURED
(R)	RECORDED
POB	POINT OF BEGINNING
POC	POINT OF COMMENCEMENT
ROW	RIGHT OF WAY
—/—	BROKEN LINE NOT TO SCALE
———	BOUNDARY OF PROPERTY SURVEYED

SURVEYORS NOTES

ACCEPTANCE OF THIS SURVEY PLAT OR USE OF THE CORNER MONUMENTS FOUND OR SET DURING THE PERFORMANCE OF THE FIELD SURVEY HEREBY LIMIT THE UNDERSIGNED LIABILITY RELATED TO PROFESSIONAL NEGLIGENT ACTS, ERRORS, OR OMISSIONS TO AN AMOUNT NOT EXCEED THE FEE CHARGED.

NO INVESTIGATION WAS MADE DURING THE PERFORMANCE OF THIS SURVEY TO DISCOVER EVIDENCE OF THE EXISTENCE OF ANY STRUCTURES WHICH MAY INDICATE THE LOCATION OF BURIED UTILITIES OR BURIED PIPELINES ON THIS PROPERTY. BURIED UTILITIES OR BURIED PIPELINES MAY OR MAY NOT EXIST. INTERESTED PARTIES SHOULD INVESTIGATE THE EXISTENCE OF UNDERGROUND UTILITIES, IF ANY, AND VERIFY. NO LIABILITY IS ASSUMED BY THE UNDERSIGNED FOR ANY LOSS THAT MAY BE ASSOCIATED WITH THE EXISTENCE OF ANY BURIED UTILITIES OR BURIED PIPELINES ON THIS PROPERTY.

UNLESS STATED OTHERWISE HEREON, THIS SURVEY WAS PREPARED WITHOUT THE BENEFIT OF ABSTRACT OF TITLE. NO LIABILITY IS ASSUMED BY THE UNDERSIGNED FOR LOSS RELATING TO ANY MATTER THAT MIGHT BE DISCOVERED BY AN ABSTRACT OR TITLE SEARCH OF THE PROPERTY.

THERE WAS NO FIELD LOCATION ATTEMPTED TO DETERMINE THE LOCATION OF OR THE EXTENT OF A POSSIBLE ENCROACHMENT BENEATH THE SURFACE. NO LIABILITY IS ASSUMED BY THE UNDERSIGNED FOR ANY LOSS THAT MAY BE ASSOCIATED WITH THE EXISTENCE OF ANY ENCROACHMENTS BENEATH THE SURFACE OF THIS PROPERTY.

UNLESS STATED OTHERWISE, GOVERNMENTAL JURISDICTIONAL AREAS OR NEGATIVE EASEMENT, IF ANY, WHICH MIGHT IMPACT ON THE USE OF THIS PROPERTY WERE NOT LOCATED. NO LIABILITY IS ASSUMED BY THE UNDERSIGNED FOR ANY LOSS RESULTING FROM THE EXERCISE OF ANY GOVERNMENTAL JURISDICTION AFFECTING THE USE OF THIS PROPERTY.

UNLESS STATED OTHERWISE HEREON, ONLY EVIDENCE OF EASEMENTS OR STRUCTURES THERETO WHICH ARE READILY APPARENT FROM A CASUAL ABOVE GROUND VIEW OF THIS PROPERTY ARE SHOWN. NO LIABILITY IS ASSUMED BY THE UNDERSIGNED FOR LOSS RELATING TO THE EXISTENCE OF ANY EASEMENT NOT DISCOVERED FROM MY CASUAL ABOVE THE GROUND VIEW OF THIS PROPERTY.

COPYRIGHT 2002 BY GARRARD LAND SURVEYING (CHARLES F. GARRARD).

GARRARD LAND SURVEYING
1603 21ST STREET HALEYVILLE ALABAMA 35565
205-486-6916

PLAT SURVEY FOR CITY OF HALEYVILLE

SCALE 1" = 500'	REVISED	DRAWN BY C GARRARD
DATE		APPROVED BY C.F.G.

PART OF SECTION 32 T9S R10W

WINSTON CO AL

DRAWING #02-064
SHEET 1 OF 2

DEED 250 963

I Charles F. Garrard hereby state that all parts of this survey and drawing have been completed in accordance with the requirements of the Minimum Technical Standards for the Practice of Land Surveying in the State of Alabama to the best of my knowledge, information and belief. According to my survey the 25th day of June, 2002.

Commence at an iron pin set(12/22/98) and purported to be the Southeast corner of the Northwest 1/4 of the Southeast 1/4 of Section 32, Township 9 South, Range 10 West, Winston County, Alabama.

Thence North 6 degrees, 15 minutes, 20 seconds West 450.00 feet to the point of beginning for the property herein described,

Thence South 87 degrees, 03 minutes, 15 seconds West 375.39 feet to a point,

Thence North 9 degrees, 04 minutes, 48 seconds West 108.61 feet to a point on the West edge of the pavement of a paved road,

Thence along the said edge of the pavement as follows,

Thence North 9 degrees, 04 minutes, 48 seconds West 79.52 feet to a point,

Thence North 35 degrees, 54 minutes, 17 seconds West 175.99 feet to a point,

Thence North 52 degrees, 39 minutes, 03 seconds West 119.54 feet to a point,

Thence North 6 degrees, 21 minutes, 37 seconds West 118.57 feet to a point,

Thence North 6 degrees, 32 minutes, 12 seconds East 82.92 feet to a point,

Thence North 4 degrees, 07 minutes, 15 seconds East 134.26 feet to a point,

Thence North 20 degrees, 09 minutes, 43 seconds West 144.77 feet to a point,

Thence North 62 degrees, 13 minutes, 57 seconds West 226.69 feet to a point,

Thence South 87 degrees, 14 minutes, 24 seconds West 135.71 feet to a point,

Thence South 67 degrees, 54 minutes, 14 seconds West 225.29 feet to a point,

Thence South 68 degrees, 53 minutes, 37 seconds West 375.00 feet to a point,

Thence leaving said edge of pavement North 15 degrees, 50 minutes, 04 seconds West 33.82 feet to an iron pin set (12/22/98) on the North margin of 20th Street,

Thence along said margin South 80 degrees, 02 minutes, 53 seconds West 116.42 feet to an iron pin set (12/22/98),

Thence leaving the North margin of 20th Street North 3 degrees, 14 minutes, 17 seconds West 500.00 feet to a point,

Thence North 68 degrees, 29 minutes, 21 seconds East 562.02 feet to a point,

Thence North 68 degrees, 00 minutes, 12 seconds West 267.48 feet to a point,

Thence North 41 degrees, 23 minutes, 30 seconds West 328.44 feet to a point,

Thence North 27 degrees, 04 minutes, 00 seconds West 196.65 feet to a point,

Thence North 70 degrees, 50 minutes, 25 seconds West 297.61 feet to a point,

Thence North 57 degrees, 02 minutes, 30 seconds West 106.32 feet to a point,

Thence North 33 degrees, 00 minutes, 34 seconds East 106.22 feet to a point in the center of a creek,

Thence along the center of said creek South 44 degrees, 32 minutes, 26 seconds East 124.49 feet to a point,

Thence continue along the center of said creek South 54 degrees, 03 minutes, 59 seconds East 54.19 feet to a point,

Thence leaving said creek North 87 degrees, 02 minutes, 35 seconds East 353.02 feet to an iron pin set (12/22/98),

Thence North 87 degrees, 02 minutes, 35 seconds East 1316.88 feet to an iron pin set (12/22/98),

Thence North 6 degrees, 15 minutes, 21 seconds West 330.08 feet to an iron pin set (12/22/98),

Thence North 86 degrees, 53 minutes, 42 seconds East 681.85 feet to an iron pin set (12/22/98),

Thence South 6 degrees, 00 minutes, 00 seconds East 330.00 feet to an iron pin set (12/22/98),

Thence South 6 degrees, 00 minutes, 00 seconds East 1315.08 feet to an iron pin set (12/22/98),

Thence South 86 degrees, 21 minutes, 13 seconds West 337.09 feet to an iron pin set (12/22/98),

Thence South 51 degrees, 52 minutes, 44 seconds West 396.50 feet to a point,

Thence South 6 degrees, 15 minutes, 20 seconds East 647.10 feet to the point of beginning and containing 79.02 acres more or less.

Charles F. Garrard
Alabama License Number 20354

ALABAMA REGISTERED NO. 20354 LAND SURVEYOR CHARLES F. GARRARD

W.O. 02-064 sheet 2 of 2

DEED 250 964

*Indicate potential for **adverse** impacts.*

A. ENVIRONMENTAL RESOURCES	No Impacts or Not Applicable	Negligible Impacts	Minor Impacts	Impacts Exceed Minor EA/EIS required	More Data Needed to Determine EA/EIS required
1. Geological resources: soils, bedrock, slopes, streambeds, landforms, etc.		X			
2. Air quality	X				
3. Sound (noise impacts)	X				
4. Water quality/quantity	X				
5. Streamflow characteristics	X				
6. Marine/estuarine	X				
7. Floodplains/wetlands	X				
8. Land use/ownership patterns; property values; community livability	X				
9. Circulation, transportation	X				
10. Plant/animal/fish species of special concern and habitat; state/ federal listed or proposed for listing	X				
11. Unique ecosystems, such as biosphere reserves, World Heritage sites, old-growth forests, etc.	X				
12. Unique or important wildlife/ wildlife habitat	X				
13. Unique or important fish/habitat	X				
14. Introduce or promote invasive species (plant or animal)	X				
15. Recreation resources, including parks, open space, conservation areas, rec. trails, facilities, services, opportunities, public access, etc.)		X			
16. Accessibility for populations with disabilities		X			
17. Overall aesthetics, special characteristics/features	X				
18. Historical/cultural resources, including landscapes, ethnographic, archeological, structures, etc.	X				
19. Socioeconomics, including employment, occupation, income changes, tax base, infrastructure	X				
20. Minority and low-income populations	X				
21. Energy resources (geothermal, fossil fuels, etc.)	X				
22. Other agency or tribal land use plans or policies	X				
23. Land/structures with a history of contamination/hazardous materials even if remediated	X				
24. Other important environmental resources that should be addressed	X				

B. MANDATORY CRITERIA If your proposal is approved, would it...	Yes	No	To be determined
1. Have significant impacts on public health or safety?		X	
2. Have significant impacts on such natural resources and unique geographic characteristics as historic or cultural resources; park, recreation, or refuge lands, wilderness areas; wild or scenic rivers; national natural landmarks; sole or principal drinking water aquifers; prime farmlands; wetlands (E.O. 11990); floodplains (E.O 11988); and other ecologically significant or critical areas?		X	
3. Have highly controversial environmental effects or involve unresolved conflicts concerning alternative uses of available resources [NEPA section 102(2)(E)]?		X	
4. Have highly uncertain and potentially significant environmental effects or involve unique or unknown environmental risks?		X	
5. Establish a precedent for future action or represent a decision in principle about future actions with potentially significant environmental effects?		X	
6. Have a direct relationship to other actions with individually insignificant, but cumulatively significant, environmental effects?		X	
7. Have significant impacts on properties listed or eligible for listing on the National Register of Historic Places, as determined by either the bureau or office?(Attach SHPO/THPO Comments)		X	
8. Have significant impacts on species listed or proposed to be listed on the List of Endangered or Threatened Species, or have significant impacts on designated Critical Habitat for these species?		X	
9. Violate a federal law, or a state, local, or tribal law or requirement imposed for the protection of the environment?		X	
10. Have a disproportionately high and adverse effect on low income or minority populations (Executive Order 12898)?		X	
11. Limit access to and ceremonial use of Indian sacred sites on federal lands by Indian religious practitioners or significantly adversely affect the physical integrity of such sacred sites (Executive Order 13007)?		X	
12. Contribute to the introduction, continued existence, or spread of noxious weeds or non-native invasive species known to occur in the area, or actions that may promote the introduction, growth, or expansion of the range of such species (Federal Noxious Weed Control Act and Executive Order 13112)?		X	
C. CATEGORICAL EXCLUSION CRITERIA			
13. Is the area previously disturbed and unlikely to result in any excavation beyond surface disturbance possibly impacting archaeology?	X		
14. Is the area regularly mowed and therefore unlikely to contain endangered species?		X	
15. Is there any surface water within direct proximity to the project which would require protection from construction impacts?	X		

Environmental Reviewers

The following individual(s) provided input in the completion of the environmental screening form. **List all reviewers including name, title, agency, field of expertise.** Keep all environmental review records and data on this proposal in state compliance file for any future program review and/or audit. **There must be at least one person listed here.**

1. Calvin Cassady, P.E., City Engineer, The Cassady Company, Inc. – Professional Engineer
2. _____
3. _____

The following individuals conducted a site inspection to verify field conditions.
List name of inspector(s), title, agency, and date(s) of inspection. There must be at least one person listed here.

1. Calvin Cassady, P.E., City Engineer, The Cassady Company, Inc. – August/September 2022
2. _____
3. _____

Signature of Chief Elected Official here:

Ken Sunseri
Signature

9-8-2022
Date

ENVIRONMENTAL SCREEING FORM
IMPACT EXPLANATION

A1. Negligible Impact. The proposed project is to replace existing stairways. The existing anchor systems will be upgraded where required. Some rocks will be drilled for anchoring. Pipes will be installed across the path to drain spring and storm water. Minimal hand digging will be done. In all cases, best practices will be utilized so as not to harm the existing environment.

A15. Negligible Impact. The existing stairways are being replaced for safety reasons and to bring more hikers to the park; giving more people the opportunity to use this trail.

A16. Negligible Impact. Accessibility for populations with disabilities is being improved on the southern 2,150 linear feet of the trail by placing small drainage culverts across the existing trail and installing a handrail to the entrance at City Lake.

C13. Yes. There are places along the existing trail where bridges / walkways are being installed that will require 3' deep by 18" wide post holes. The Contractor will be required to notify the property authorities if anything is found in the excavation process.

C15. Yes. Where excavation is being conducted, silt fences will be required to be installed and properly maintained.

Environmental Checklist For Recreational Trails Program Project

County: Winston

Project Location: Rocky Ravine Park Latitude: 34°13'56"N Longitude: 87°36'30"W

Project Sponsor/Applicant: City of Haleyville

Project Description: Rocky Ravine Park Walking Trail: Rehab original trail as well as build new trail and access points to improve connectivity to other city assets.

Concurrence from Alabama Historical Commission attached?	**Yes _**	**No _X_**
Concurrence from U.S. Fish and Wildlife Services attached?	**Yes _**	**No _X_**
Concurrence from the U.S. Army Corps of Engineers attached?	**Yes _**	**No _X_**
Tribal Consultation attached?	**Yes _**	**No _X_**
Was the property acquired before January 1971?	**Yes X_**	**No __**
If "No" explain property acquisition process (Use additional sheets if necessary):		
Environmental Concurrence request have been submitted to each agency. Copies of these requests are attached.		

Note: If you have not received the concurrence letters by the application deadline, submit copies of the request letters. Concurrences over three (3) years old cannot be used and new concurrences must be obtained.

Required Letters of Concurrence and Release of Conditions

U.S. Army Corps of Engineers

Mobile District Corps of Engineers	**Nashville District Corps of Engineers**
Chief, Regulatory Division	Western Regulatory Field Office
Post Office Box 2288	2424 Danville Road, SW, STE N
Mobile, Alabama 36628-0001	Decatur, Alabama 35603-4219
Phone: 251-690-2658	Phone Number: 256-350-5620

Alabama Historical Commission: Amanda McBride, Environmental Review Coordinator, Alabama Historical Commission, Post Office Box 300900, Montgomery, Alabama 36130-0900, Phone: 334-230-2692, Email: amanda.mcbride@ahc.alabama.gov

U.S. Fish And Wildlife Service: Mr. Bill Pearson, Field Supervisor, U.S. Fish and Wildlife Service, 1208-B Main Street, Daphne, Alabama 36526-4419, Phone: 251-441-5181, Email: bill_pearson@fws.gov.

Rocky Ravine
Public Hearing
5:00 PM City Hall

Calvin Cassady
Rodney Lewis
Kay Bashoff

Amy Melson, NWA
Valerie Taylor
Carla Kilgore

Beau Cooper - NACOLG
Ken Simmons
Drew Thrasher
[illegible]
[illegible]
Christy Harbin

Todd Barton, ChFC, RICP
State Farm Insurance Companies
1123 20th Street
Haleyville, AL 35565
205.486.2776

Haleyville Parks and Recreation
911 21st Street
Haleyville, AL 35565

August 25, 2022

To Whom It May Concern:

The citizens of Haleyville are very lucky to have Rocky Ravine Park and the City Lake Walking Trails. The lake once the source of water for our town, is now a place of natural scenic beauty. The unique geological area is made up of three box canyons each highlighting picturesque rock formations carved over the millennia. The trails within lead you through a canopy of majestic and rare old growth Tulip Popular, Red Oak and Pine trees. This rare habitat housed many different unusual plants and animals, a truly wild place right in the middle of town.

I once lived near Rocky Ravine Park and was very fortunate to be able to enjoy walking through the trials on the way to work. It was a calming experience traveling by foot through such a peaceful, esthetic place, a great start to a busy day.

Please consider upgrading the facilities and pathways to this special park. It would be money well spent for this exceptional resource, opening it up for more people to share and enjoy.

Sincerely,

Todd Barton, Agent
State Farm Insurance Companies

August 29, 2022

Grant Consideration Committee,

National Parks and Recreation Organization sums it up perfectly, "Just as water, sewer, and public safety are considered essential public services, parks are vitally important to establishing and maintaining the quality of life in a community, ensuring the health of families and youth, and contributing to the economic and environmental well-being of a community and a region." We are fortunate to have two parks in the middle of the city limits of Haleyville. The need to connect the two parks with upgraded access, and walking trails will increase park attendance and encourage more outdoor recreation opportunities for the citizens of Haleyville and for visitors that are seeking fun and free activities.

Parks provide places for families to come together and enjoy the benefits of fresh air, wildlife, and nature as a backdrop to a family picnic, reunion, or birthday party. The need in our area still exist to continue to expand the use and draw citizens to explore and enjoy the benefits in their backyard.

The parks are also within walking distance from our city schools. The upgrades will increase learning opportunities in a safe and accessible outdoor atmosphere. According to gse.harvard.org, "Research has shown that outdoor learning can have huge benefits on student mental health and academic performance. Students are often calmer and better able to focus when learning in nature, and teachers have reported better behavior and social interactions with fewer disciplinary issues." As an educator, students love outdoor educational opportunities the benefits of the park within walking distance is an asset to our school and students.

Nicole Cook

Supporter of Community Parks

August 28, 2022

To Whom It May Concern:

I'm writing to express my support for the City of Haleyville to receive this special grant that would improve the walking trails located at Rocky Ravine Park and City Lake.

Haleyville is a small, rural community that takes much pride in its resources that is offered to its community members and visitors. The parks are an excellent natural outdoor environment which can be accessed easily and enjoyed greatly by individuals of all ages. Not only, are the walking trails used by community members, young and old, and visitors, but they are also a great resource for the students of Haleyville City Schools to use as outdoor classrooms. Therefore, it is of great importance that the city continues to maintain its parks so that a safe and healthy environment can be enjoyed by all.

In closing, I would like to once again state the importance of receiving this special grant for the City of Haleyville. The grant would help the City of Haleyville to continue to offer the best and safest walking trails for everyone's use. Your consideration in this matter would be greatly appreciated.

Sincerely Thankful,

Linda Godsey

Educator and Senior Citizen

Joel,

I just wanted to drop you a note and express how much we enjoy Rocky Ravine Park. We often walk and hike there and very much enjoy the beauty this area has to offer. We feel like it is the best kept secret in Haleyville and could become a greater asset to the City with some much needed improvements. Some of the trails and areas of the park are inaccessible due to overgrown brush, rotted stairs, and rotted or missing bridges. We would support all efforts to improve this Park for our personal enjoyment and to encourage more people to take advantage of all that it has to offer.

Thanks,

John Mitchell

Plant MGR TRU AL

(601) 720-9941 Cell

(205)935-1997 TRU-RB

(205)893-2424 TRU-Lynn

August 30, 2022

To whom it may concern:

Rocky Ravine Park and City Lake Canyon hiking and walking trails are located in the city limits of Haleyville, Al. What a beautiful place to visit. The trails offer a freshwater creek that flows year-round through the canyon floor that makes for a pleasant and peaceful hike. This was the main water supply for the city of Haleyville back years ago and the relics of the old water treatment spots makes it even more interesting.

The canyon trails are also located within a short walk from our High School, middle school and elementary school. These hiking trail provide them with a unique opportunity for learning, exploring, stewardship and fitness.

As the Parks and Recreations Director I have seen firsthand the direct impact and importance of having great parks. I fully support any efforts to promote, develop and adopt projects that will make these parks and trails more friendly and accessible so that our citizens can take full advantage of these assets.

Joel Sherrill

Parks and Recreation Director

City of Haleyville

Rocky Ravine revitalization

From : booboo35565@yahoo.com Thu, Aug 25, 2022 03:14 PM
Subject : Rocky Ravine revitalization
To : Charbin@cityofhaleyville.com

I was actually thinking the other day about Rocky Ravine and City Lake. We are fortunate to have such beautiful natural areas right in the city limits. Revitalization of both areas is much needed. When this project is completed our citizens and visitors alike will have a nice place to relax and explore nature. I can't wait to see it completed!!