Alabama Inland Port Infrastructure Program
Grant Application and Guide

E-mail Address: inland.ports@adeca.alabama.gov

Website: http://adeca.alabama.gov/inlandports

2020 Grant Application Guidelines

The Alabama Inland Port Infrastructure Program is designed to award infrastructure funds for inland port capital improvement initiatives. This solicitation focuses on capital improvement initiatives that include but are not limited to activities to facilitate and coordinate inland port development, improvement, maintenance, onsite storage, moorings, and construction. For the purposes of this program, an inland port is a port located along one of Alabama's inland waterways that provides an inter-modal transportation hub.

Applications shall be submitted in PDF format by email to inland.ports@adeca.alabama.gov. Applications will be accepted starting on March 6, 2020. Completed applications must be submitted by 11:59 PM, CST, on April 6, 2020. Any applications received after the deadline will not be considered. All applications must be complete; however, ADECA reserves the right to contact applicants for additional information and/or clarifications. All applications and supporting materials submitted shall become the property of ADECA and will be posted on ADECA's website at http://adeca.alabama.gov/inlandports.

Eligibility

Eligible applicants for the program are port authorities, commissions, or their subdivisions and agents under existing authority, as well as a political subdivision of a local government, tribal government, a public agency or publicly chartered authority established by the state.

Grants will only be awarded for capital improvements at an inland port owned by a public port authority or an inland port authorized, maintained, or operated by a public port authority through any legal arrangement with the state or federal government or instrumentality.

Funding shall not be approved for routine maintenance, administrative and operational expenses, debt service, or for the dredging of waterways within the state that are not in the immediate vicinity of an inland port facility. Additionally, the use of funding to establish or construct new inland ports, or to acquire land shall not be eligible for funding unless a feasibility study and competitive analysis has been performed and submitted for review to ADECA, prior to the application deadline.

Funding

The total amount of funds available for this solicitation is $1,762,994.80, which is the maximum award amount. An applicant may not submit more than one application.

Grant funds awarded through this solicitation, require at least a twenty percent (20%) match of the total project amount requested. ADECA will only fund up to eighty percent (80%) of the total project amount requested. However, additional points may be awarded for match amounts that exceed the 20% requirement.

ADECA will not consider previously incurred costs or previously expended or encumbered funds for reimbursement under the grant or towards the matching requirement for any project.

Projects must be completed within two years of the effective date of the grant agreement. The grant will be in the form of a reimbursement of eligible costs up to the award amount in the grant agreement. Reimbursements will be made within 30 days of project completion and final inspection by ADECA.

Priority of funding shall be given to inland ports that have proven performance in reducing congestion on public highways, proven performance in increasing tonnage at port facilities, and/or inland ports that will enhance regional competitiveness for port operators and users. Adding employment can be a factor under the program; however, the applicant must provide documentation indicating how many jobs would be created through the proposed project within the application.

All projects will be scored based on established rating criteria. Those eligible projects receiving the highest score will be selected for funding. The number of projects funded will be determined by the funds available and the total amount of request made. ADECA may request amended projects and/or offer reduced grant participation.

Grant recipients must register in the State of Alabama Accounting and Resource System (STAARS) Vendor Self Service (VSS) portal in order to receive payment. Recipients can elect to be paid via Electronic Funds Transfer (EFT) or paper check when registering.

2019 Grant Application

APPLICANTS MUST USE THE FOLLOWING APPLICATION FORMAT, COMPLETE IT IN ITS ENTIRETY, AND LABEL ATTACHMENTS AS INSTRUCTED. FAILURE TO DO SO, MAY RESULT IN A LOSS OF POINTS.

Applicant Information

Project Name: **Mallard-Fox Creek Port Alloys Warehouse & Storage Facility**

Legal Name of Entity: **Decatur Morgan County Port Authority**

Mailing Address: **300 Market Street NE, Suite 2, Decatur, AL 35601**

Name and Title of CEO: **Harvey Pride, President**

Name and Title of Contact: **Jeremy Nails, Executive Director**

Phone Number and Email of Contact: **256-353-1213, jwn@mceda.org**

Project Description

This section is worth up to 50 points. Points will be awarded based on verifiable information

Please complete the following section. Any attachments shall be titled Attachment A, Project Description.

1. **10 Points** - A detailed discussion of the project including specific project activities to be completed, location, and quantifiable benefits to be accomplished.

   The Decatur-Morgan County Port Authority is proposing to construct a 40,000 +/- square foot new warehouse facility to increase usage, reduce truck traffic, and increase tonnage shipped into and out of the Mallard-Fox Creek Industrial Park and Port Facilities by an estimated 22,000 to 25,000 tons per year. The existing port is located on Red Hat Road in Decatur, Morgan County, Alabama. Please find detailed site plans (*Attachment A.1)* for preliminary project location within the existing port facilities operations.

20 Points - A discussion of how the project meets one or more of the program priority areas. This section shall also include a discussion of the review process completed prior to application submission. **Preliminary concurrence from applicable authorities and departments is a requirement of the application.** All applicants claiming to meet one or more of the program priority areas must provide verifiable documentation of one or more of the following:

Please find supporting evaluations from Watco, our current port operator (Attachment A.2) and concurrence from the Tennessee Valley Authority (Attachment A.3) and the City of Decatur (Attachment A.4).

- The applicant proposes measurable and proven activities that will reduce congestion on public highways,
    - **Approximately 82,000 tons of alloys come into Decatur annually, 100% of this volume is currently trucked to offsite storage areas;**
    - **The current offsite warehousing is not rail served; this warehouse would be able to provide that option potentially reducing the truck traffic from the facility. This warehouse could result in the removal of over 3700 short range and 745 long range truck moves annually (based on 20% of annual volume being loaded to rail)**
- The applicant proposes measurable and proven activities that will increase tonnage at port facilities, and/or
    - **Just in the alloy market, this warehouse could provide an additional 22K to 25K in annual tonnage and additional revenue for the Port Authority (this equates to an incremental 15 barges annually);**
    - **Beyond the alloy market this warehouse will offer additional growth opportunities in other markets such as steel, rough grains and project cargo such as weather sensitive components related to the auto manufacturing industry.**
- The applicant proposes to enhance regional competitiveness for port operators and users.
    - **The project will provide the Decatur River Port with additional inside storage capacity which is in high demand and will continue to be as the Mazda-Toyota project progresses;**
    - **This project will ensure Decatur River Port will be able to continue offering the most efficient competitive service to alloy and steel customers who have used the Decatur River Port since the early 1980's;**
    - **Recently we have seen pressure from warehouses in Memphis, TN and Vicksburg, MS competing for the alloy tonnages with available covered storage.**

2. **10 Points** - A discussion of the applicant's technical and managerial capabilities to complete the project within two years of the effective date of the grant award.

   The Decatur-Morgan County Port Authority has a consistent history of successful construction capabilities and port management. The Port Authority was incorporated in April 1982. Its purpose was to develop property along the Tennessee River for industrial use. The Port Authority was given the power to buy, equip, and fund industrial developments within its jurisdiction, which initially was a three-mile radius of the river, but was expanded in 2007 by the Alabama Legislature to include the entire county. The law that was passed allows port facilities to develop properties within the entire county in which they are located, beyond the original three-mile limit.

   During fiscal year 1986-87 Governor Guy Hunt signed the deeds that transferred the Alabama State Docks in Decatur to the Port Authority. The State Docks site consisted of the docks and

approximately 90 acres of industrial property. The development of phases one and two was completed in 1996.

In the late 1980s and early 1990s, the Port Authority was heavily involved in developing the 1,000+ acre Mallard-Fox Creek Industrial Park and Port. Construction of phase one of the current general commodities port facility began in November 1990. The dock facility has 320 feet of river frontage and is large enough to allow two barges to offload at one time. After the docks' completion, in August 1992, the bid to lease the port facility was awarded to Hill's Marine Enterprises, Inc. who operated the port until 2000. In April 2000 the operation of the port facility was transferred to Global Materials Services LLC (GMS). Kinder Morgan acquired Global Materials in 2004 and operated the port until 2016. In 2016, Watco Transloading-Decatur River Port began operating both the Mallard-Fox Creek and State Docks port facilities.

In addition, the Port Authority managed the engineering and construction of a Roll-on, Roll-off dock built to accommodate loading rockets that are constructed at United Launch Alliance's manufacturing facility in Decatur. The Port Authority continues to manage and coordinate the use of that dock facility with ULA and other users.

3. **10 Points** – The applicant shall identify from the list below, how the applicant meets the eligibility requirement. Please include documentation that the applicant is eligible to apply for the funds. **Please find the Certificate of Incorporation for the Decatur Morgan County Port Authority (*Attachment A.5*).**

   ☒ **Port authorities**
   ☐ Port commissions
   ☐ Subdivisions and agents under existing authority
   ☐ Political subdivision of a local government
   ☐ Tribal government
   ☐ Public agency
   ☐ Publicly chartered authority established by the state.

<u>Project Budget</u>

This section is worth up to 50 points. Points will be awarded based on verifiable information

Please complete the following section. Any attachments shall be titled Attachment B, Project Budget. Please note that a 20% match is required for all projects; however, additional points can be earned throughout this section for all applicants who commit to provide additional matching funds.

1. **5 Points** - Please complete the table below. The total grant amount cannot exceed the lesser of 80% of total project costs.

Total Project Cost	$2,059,865.72
20% of Total Project Cost (match)	$411,973.14
80% of Project Total (maximum grant)	$1,647,892.58
Total Grant Amount Requested	**$1,647,892.58**

2. **20 Points** - Please provide a detailed project budget narrative to include itemized eligible project expenses. Generally, eligible expenses will be limited to infrastructure funds for inland port capital improvement initiatives that include but are not limited to funds used to facilitate and coordinate inland port development, improvement, maintenance, onsite storage, moorings, and construction.

   Funding shall not be approved for routine maintenance, administrative and operational expenses, debt service, or for the dredging of waterways within the state that are not in the immediate vicinity of an inland port facility. Additionally, the use of funding to establish or construct new inland ports, or to acquire land shall not be eligible for funding unless a feasibility study and competitive analysis has been performed and submitted for review to ADECA.

   Please see the attached (Attachment B.1) letter and breakdown for the *Opinion of Probable Cost for a New DRP 40,000 Square Foot Warehouse at the Mallard-Fox Creek Port Facility* from engineering firm Pugh Wright McAnally, Inc. Pugh Wright McAnally has been the engineering firm for the Decatur-Morgan County Port Authority throughout the original design and construction of the current port facilities.

3. **10 Points** - Please identify the source and amount of matching funds. Appropriate resolutions and/or financial documents should be included. Any additional expenses associated with the project, but not part of the grant budget, should be included.
   The Decatur Morgan County Port Authority will be responsible for the matching funds to complete the project. Please see the attached Port Authority Grant Application Resolution (Attachment B.2) and Port Authority Financial Statements from Fiscal Year 2018-2019 (Attachment B.3) for our current financial status. Less than $5,000 has been expended to-date on preliminary engineering, design, and testing to provide an accurate opinion of costs, and are not included in the budget.

4. **5 Points** - A discussion of any other funds associated with the project, but not included in the budget.

   There are no other funds associated with the project that are not included in the budget.

5. **10 Points** - Please complete the following table.

Budget Item	Funding Amount and Source Grant	 Match	Total
Engineering/Design	$56,581.51	$14,145.37	$70,726.88
Permits	$4,000.00	$1,000.00	$5,000.00
Construction			
Materials	$1,347,440.00	$336,860.00	$1,684,300.00
Labor	$155,400.00	$38,850.00	$194,250.00
Other			
Materials	$78,471.07	$19,617.77	$98,088.84
Labor	$6,000.00	$1,500	$7,500.00
Total	$1,647,892.58	$411,973.14	$2,059,865.72

Certifications

1. The applicant certifies that it is a (choose all that apply):

   ☒ **Port authority**
   ☐ Port commission
   ☐ Subdivision and/or agent under existing authority
   ☐ Political subdivision of a local government
   ☐ Tribal government
   ☐ Public agency
   ☐ Publicly chartered authority established by the state

2. The applicant certifies that the funds will not be used for routine maintenance, administrative and operational expenses, debt service, or for the dredging of waterways within the state that are not in the immediate vicinity of an inland port facility.

3. The applicant certifies receipt of a preliminary concurrence from the appropriate state agencies such as, Alabama Department of Transportation, Alabama Department of Environmental Management, Alabama Port Authority, or any other applicable authority or department.

Certification	
I, the undersigned, am authorized to obligate my entity and enter into agreements for my organization. I understand that the above certifications do not guarantee funding and a grant agreement will be executed prior to project funds being expended. I further understand that if the above statements cannot be verified, no grant funds will be awarded under this program. Finally, to the best of my knowledge the above certifications are true and correct.	
Signature of Applicant:	Date: **04/06/2020**
Title of Applicant: **Executive Director**	

For more information regarding the Alabama Inland Port Infrastructure Program, please send questions to inland.ports@adeca.alabama.gov, or call (334) 242-5292 between the hours of 8:00 a.m. to 5:00 p.m., Monday through Friday.

State of Alabama – Disclosure Statement

Alabama Act 2001-955 requires the *State of Alabama Disclosure Statement* (Attachment C) to be completed and filed with all proposals, bids, contracts, and grant proposals to the State of Alabama in excess of $5,000. A fillable PDF is available on our website at http://adeca.alabama.gov/inlandports. Complete all lines as indicated. If an item does not apply, denote 'N/A' (not applicable). If you cannot include required information in the space provided, attach additional sheets as necessary. **The form must be signed, dated, and notarized.**

Attachments A, Project Description

Attachment A.1	**Site Plans and Preliminary Site Location Map**
Attachment A.2	**Current Port Operator, Watco, Supporting Evaluation of Need**
Attachment A.3	**Concurrence Letter from the Tennessee Valley Authority**
Attachment A.4	**City of Decatur Preliminary Approval**
Attachment A.5	**Certificate of Incorporation for the Decatur Morgan County Port Authority**

Attachment A.1 PLANS FOR

WATCO COMPANY
DRP WAREHOUSE

1802 RED HAT RD,
DECATUR, AL 35601

N
W E
S

VICINITY MAP

WITHIN SECTION 3, TOWNSHIP 5 SOUTH, RANGE 5 WEST
DECATUR, MORGAN COUNTY, ALABAMA

LEGEND

G100	COVER SHEET
G200	GENERAL NOTES
C100	EXISTING CONDITIONS
C200	PROPOSED SITE PLA
C300	GRADING PLAN
C400	EROSION CONTROL PLANS
C500	EROSION CONTROL DETAILS

PUGH WRIGHT MCANALLY CIVIL ENGINEERS
310 8th AVENUE NE -- PO BOX 2419 -- DECATUR, AL -- (256) 353-3937
Pugh Wright McAnally, Inc. www.pughwrightmcanally.com

REVISIONS

Rev#	Description	Date
5		
4		
3		
2		
1		

WATCO COMPANY
DRP WAREHOUSE
DECATUR-MORGAN COUNTY PORT
SECTION 3, TOWNSHIP 5 SOUTH, RANGE 5 WEST
DECATUR, MORGAN COUNTY, ALABAMA

COVER SHEET

Date: 04-01-2020
Drawn By: NLT
Approved By: HBM
Scale: NTS

Sign/Seal
ALABAMA LICENSED NO. 30456 PROFESSIONAL ENGINEER 4-1-2020 NATHAN L. TAMPLIN
DRAFT

Job Number:
552-20

Sheet Number:
G100

Attachment A.1

1. CONSTRUCTION MATERIALS, EQUIPMENT AND PROCEDURES SHALL BE IN GENERAL ACCORD WITH ALABAMA DEPARTMENT OF TRANSPORTATION (ALDOT) STANDARD SPECIFICATIONS FOR HIGHWAY CONSTRUCTION, 2018 EDITION, LESS DIVISION 100 THEREOF.

2. THE OWNER RESERVES THE RIGHT TO DIRECT THE PRIORITY OF THE WORK, TO COORDINATE SCHEDULE REQUIREMENTS AND PREVENT UNNECESSARY DISRUPTION OF TRAFFIC AND OTHER ACTIVITIES WITHIN THE PROJECT AREA.

3. A PRECONSTRUCTION CONFERENCE SHALL BE REQUIRED PRIOR TO BEGINNING WORK. THE CONTRACTOR SHALL FURNISH HIS PROPOSED CONSTRUCTION SCHEDULE, INSURANCE CERTIFICATES, MATERIALS SUPPLIERS, SUBCONTRACTORS, ETC., FOR THE CONFERENCE.

4. PRIOR TO ANY EARTHWORK OR EXCAVATION, CONTRACTOR SHALL CALL ALABAMA ONE CALL TO HAVE ALL UNDERGROUND PUBLIC UTILITIES LOCATED AND MARKED. CONTRACTOR SHALL CALL AT LEAST 2 DAYS PRIOR TO DIGGING OR EXCAVATING. ALABAMA ONE CALL CAN BE REACHED AT 1-800-292-8525. CONTRACTOR SHALL ALSO OBTAIN ALL REQUIRED PERMITS FOR WORK TO BE PERFORMED ON DAIKIN AMERICA PROPERTY PRIOR TO START OF ANY WORK.
CONTRACTOR SHALL VERIFY LOCATIONS OF ALL BURIED UTILITIES AND STRUCTURES WITH DAIKIN REPRESENTATIVE PRIOR TO START OF ANY EARTHWORK OR EXCAVATION. CONTRACTOR SHALL NOTIFY ENGINEER OF CONFLICTS AND SHALL PROTECT ALL EXISTING UTILITIES.

5. CONTRACTOR SHALL COORDINATE ALL STREET AND/OR ALLEY CROSSINGS WITH THE OWNER'S REPRESENTATIVE PRIOR TO CLOSING STREETS AND/OR ALLEYS. APPROPRIATE BARRICADES, SIGNS (TO INCLUDE DETOUR SIGNS IF REQUIRED), LIGHTS, FLAGGING, ETC., SHALL BE PROVIDED BY CONTRACTOR.

6. CONTRACTOR WILL CONFORM TO ALL LOCAL ORDINANCES, CODES AND REQUIREMENTS. ANY SPECIAL PERMITS OR REQUIREMENTS WILL BE COMPLETELY ENFORCED.

7. THE CONTRACTOR IS ADVISED THAT GRADING ADJACENT TO ALL FACILITIES SHALL BE COMPLETE, SMOOTH AND PLEASING. POSITIVE DRAINAGE WILL BE PROVIDED THROUGHOUT THE ENTIRE PROJECT AREA DURING CONSTRUCTION AS WELL AS AFTER FINAL CLEANUP.

8. HORIZONTAL AND VERTICAL SURVEY CONTROL REFERENCES WILL BE PROVIDED BY THE OWNER. ALL OTHER CONSTRUCTION LAYOUT SHALL BE PROVIDED BY THE CONTRACTOR.

9. MATERIALS TESTING WILL BE PROVIDED BY THE OWNER.

10. CLEARING AND GRUBBING SHALL INCLUDE REMOVAL OF ALL EXISTING TREES AND BRUSH, STRUCTURES, CURBS, CABLES, SLABS, PAVEMENT, DEBRIS, AND ALL OTHER ITEMS TO BE REMOVED. ALL DEBRIS SHALL BE REMOVED FROM THE SITE AND DISPOSED AT THE CONTRACTOR'S EXPENSE.

11. CLEARING, GRUBBING, STRIPPING AND UNSUITABLE MATERIAL EXCAVATION SHALL BE ACCOMPLISHED TO THE SATISFACTION OF THE OWNER'S REPRESENTATIVE PRIOR TO PERFORMING THE EARTHWORK. THE SURFACE SHALL THEN BE SCARIFIED, COMPACTED, PROOFROLLED AND APPROVED PRIOR TO PLACING THE FILL MATERIAL.

12. ALL TRENCHES UNDER PAVED AREAS, SHOULDERS AND DRIVEWAYS SHALL BE FILLED TO SUBGRADE WITH CRUSHED AGGREGATE BASE COURSE, TYPE "B", PLANT MIXED, PLACED IN 6" LAYERS AND COMPACTED TO 100% PROCTOR DENSITY OR 85% SOLID VOLUME AT OPTIMUM MOISTURE (+/-2%). FLOWABLE BACKFILL MAY BE USED AS AN ALTERNATE. NO SEPARATE PAYMENT SHALL BE MADE FOR FLOWABLE OR AGGREGATE BACKFILL.

13. THE CONTRACTOR SHALL BACKFILL ALL OPEN EXCAVATIONS BEFORE THE END OF EACH DAY UNLESS APPROVED BY THE OWNER'S REPRESENTATIVE AND SHALL NOT LEAVE OPEN EXCAVATIONS UNATTENDED. NO SEPARATE PAYMENT WILL BE MADE FOR THIS REQUIREMENT, BUT SHALL BE INCLUDED IN THE LUMP SUM PRICE BID FOR THE ITEMS OF WORK.

14. PAVEMENT REPAIR SHALL BE INCLUDED IN THE LUMP SUM PRICE BID FOR WORK. SAW THE ENDS AND EDGES OF THE EXISTING PAVEMENT TO PROVIDE STRAIGHT END SECTIONS FOR PAVING REPAIR. PRIME THE EXPOSED BASE AND THE CURED BACKFILL WITH RC-70 OR RC-250. PERFORM PAVING REPAIR WITH HOT ASPHALT PLANT MIX (ALDOT 424 OR 429).

15. ALL SCARRED AREAS NOT PAVED (ASPHALT, CONCRETE, OR GRAVEL) SHALL BE GRASSED.

16. GRASS SEED SHALL BE APPROVED BY THE OWNER'S REPRESENTATIVE.

17. THE OWNER WILL ACQUIRE THE SEPARATE STORMWATER PERMIT FROM THE ALABAMA DEPARTMENT OF ENVIRONMENTAL MANAGEMENT (ADEM). THE CONTRACTOR SHALL BE RESPONSIBLE TO PROVIDE BEST MANAGEMENT PRACTICES DURING CONSTRUCTION TO ATTENUATE ENVIRONMENTAL EFFECTS OF SILTATION AND/OR EROSION.

18. THE SITE WILL BE SHAPED IN ACCORD WITH THE FINISHED GRADE CONTOURS AND GRADED TO DRAIN. CONTROLLED EARTHFILL MATERIAL SHALL BE INSTALLED FOR THE STREET SUBGRADE AND BUILDING SITES WHERE FILL IS REQUIRED. UNSUITABLE MATERIAL FROM UNCLASSIFIED EXCAVATION SHALL BE REMOVED FROM THE UAH CAMPUS.

19. DUST CONTROL BY WATERING OR OTHER METHOD APPROVED BY THE OWNER'S REPRESENTATIVE SHALL BE MAINTAINED BY THE CONTRACTOR THROUGHOUT THE DURATION OF THIS CONTRACT.

PUGH WRIGHT MCANALLY INC.
CIVIL ENGINEERS
310 8th AVENUE NE -- PO BOX 2419 -- DECATUR, AL -- (256) 353-3937
Pugh Wright McAnally, Inc. www.pughwrightmcanally.com

REVISIONS

Rev#	Description	Date
5		
4		
3		
2		
1		

WATCO COMPANY
DRP WAREHOUSE
DECATUR-MORGAN COUNTY PORT
SECTION 3, TOWNSHIP 5 SOUTH, RANGE 5 WEST
DECATUR, MORGAN COUNTY, ALABAMA

GENERAL NOTES

Date: 04-01-2020
Drawn By: NLT
Approved By: HBM
Scale: NTS

Sign/Seal
ALABAMA LICENSED NO. 30456 PROFESSIONAL 4-3-2020 ENGINEER
DRAFT

Job Number:
612-19

Sheet Number:
G200

Attachment A.1

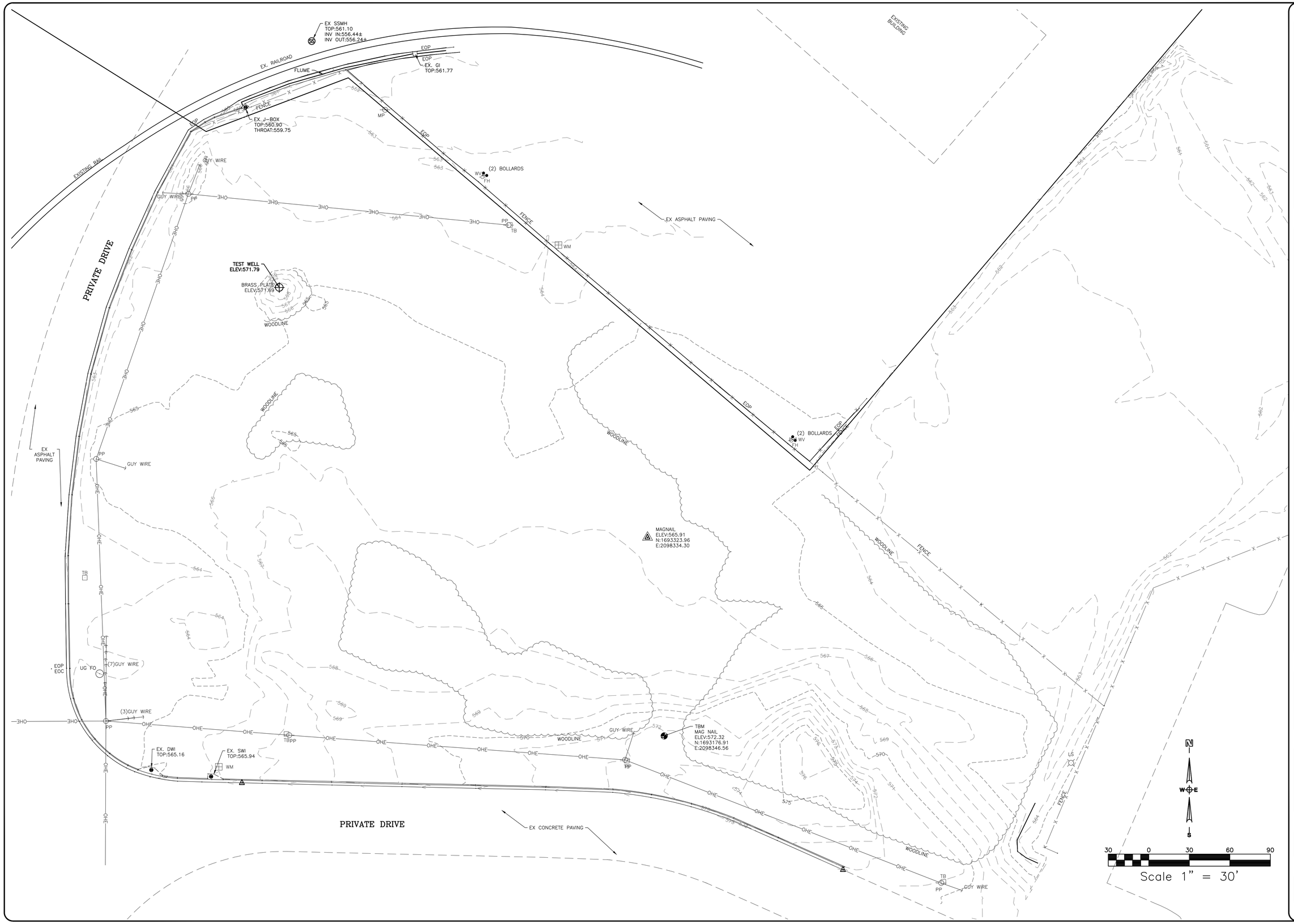

PUGH WRIGHT McANALLY INC.
CIVIL ENGINEERS
310 8th AVENUE NE -- PO BOX 2419 -- DECATUR, AL -- (256) 353-3937
Pugh Wright McAnally, Inc. www.pughwrightmcanally.com

REVISIONS

Rev#	Description	Date
5	..	..
4	..	..
3	..	..
2	..	..
1	..	..

DECATUR-MORGAN
NEW MFC PORT ALLOY STORAGE WAREHOUSE
MORGAN COUNTY PORT
SECTION 3, TOWNSHIP 5 SOUTH, RANGE 5 WEST
DECATUR, MORGAN COUNTY, ALABAMA

EXISTING CONDITIONS

Date: 04-02-2020
Drawn By: NLT
Approved By: HBM
Scale: 1"=30'

Sign/Seal
ALABAMA LICENSED NO. 30456 PROFESSIONAL ENGINEER 4-1-2020 NATHAN L. MARTIN
DRAFT

Job Number:
552-20

Sheet Number:
C100

Attachment A.1

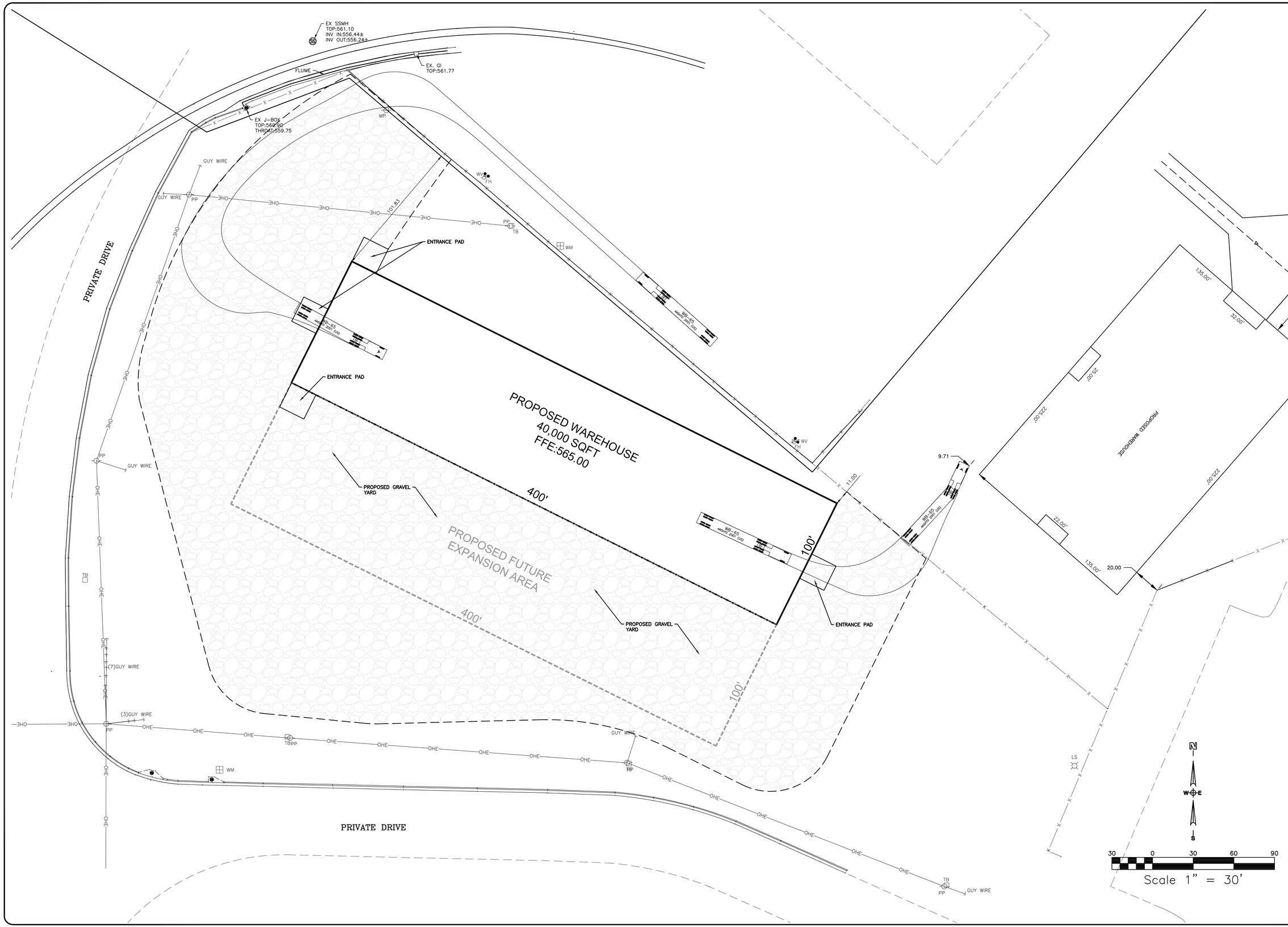

PUGH WRIGHT McANALLY INC.
CIVIL ENGINEERS
310 8th AVENUE NE -- PO BOX 2419 -- DECATUR, AL -- (256) 353-3937
Pugh Wright McAnally, Inc. www.pughwrightmcanally.com

REVISIONS

Rev#	Description	Date
5	..	..
4	..	..
3	..	..
2	..	..
1	..	..

DECATUR-MORGAN
NEW MFC PORT ALLOY STORAGE WAREHOUSE
MORGAN COUNTY PORT
SECTION 3, TOWNSHIP 5 SOUTH, RANGE 5 WEST
DECATUR, MORGAN COUNTY, ALABAMA

PROPOSED SITE PLAN

Date: 10-31-2016
Drawn By: NLT
Approved By: HBM
Scale: 1"=30'

Sign/Seal
ALABAMA LICENSED NO. 30456 PROFESSIONAL ENGINEER 4-1-2020 NATHAN L. MERLIN
DRAFT

Job Number:
552-20

Sheet Number:
C200

Attachment A.1

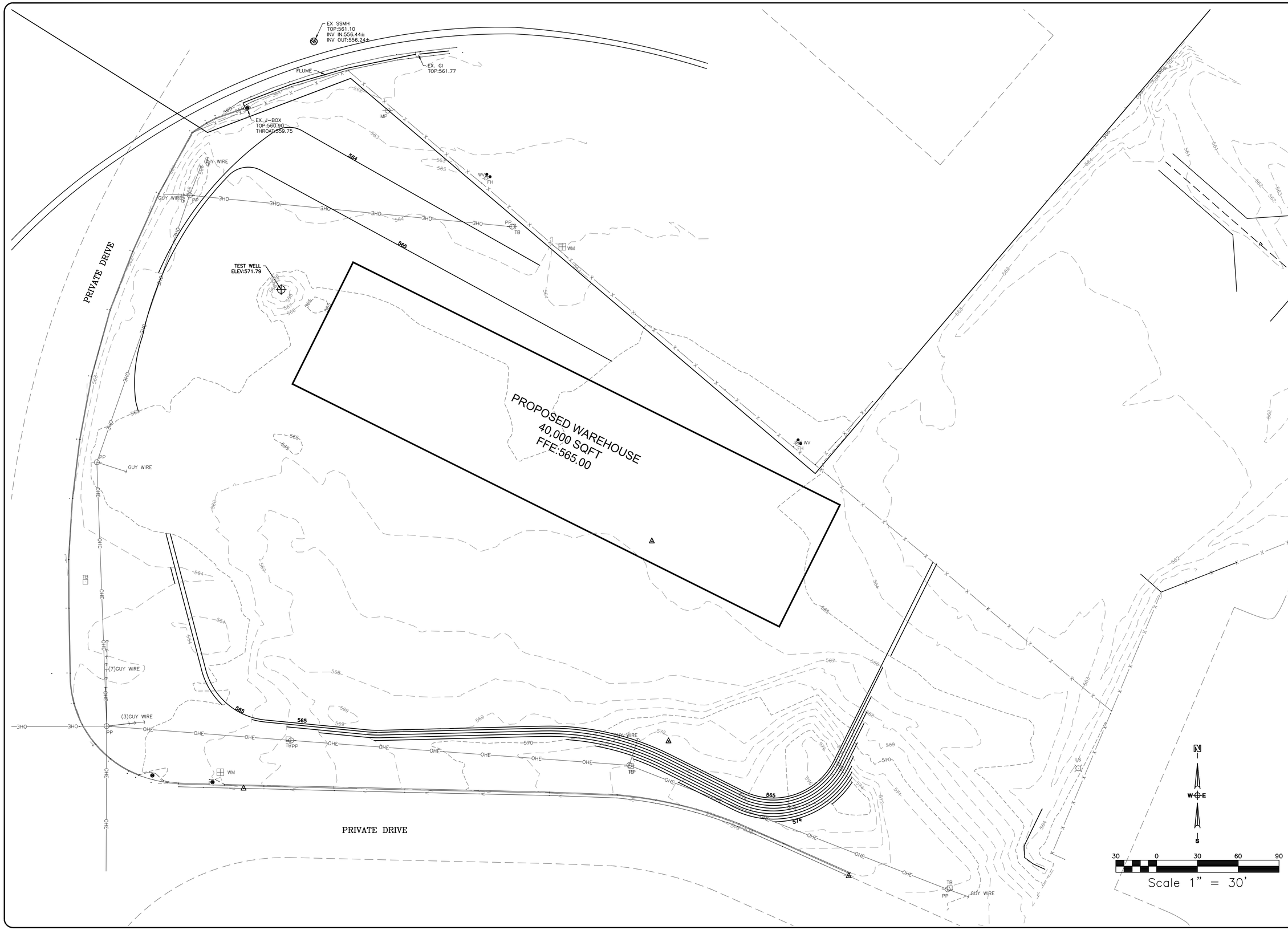

PUGH WRIGHT McANALLY INC.
CIVIL ENGINEERS
310 8th AVENUE NE -- PO BOX 2419 -- DECATUR, AL -- (256) 353-3937
Pugh Wright McAnally, Inc. www.pughwrightmcanally.com

REVISIONS

Rev#	Description	Date
5	..	..
4	..	..
3	..	..
2	..	..
1	..	..

DECATUR-MORGAN
NEW MFC PORT ALLOY STORAGE WAREHOUSE
MORGAN COUNTY PORT
SECTION 3, TOWNSHIP 5 SOUTH, RANGE 5 WEST
DECATUR, MORGAN COUNTY, ALABAMA

GRADING PLAN

Date: 10-31-2016
Drawn By: NLT
Approved By: HBM
Scale: 1"=30'

Sign/Seal
ALABAMA
LICENSED
NO. 30456
PROFESSIONAL
4-1-2020
ENGINEER
NATHAN L. MERLIN
DRAFT

Job Number:
552-20

Sheet Number:
C300

Attachment A.1

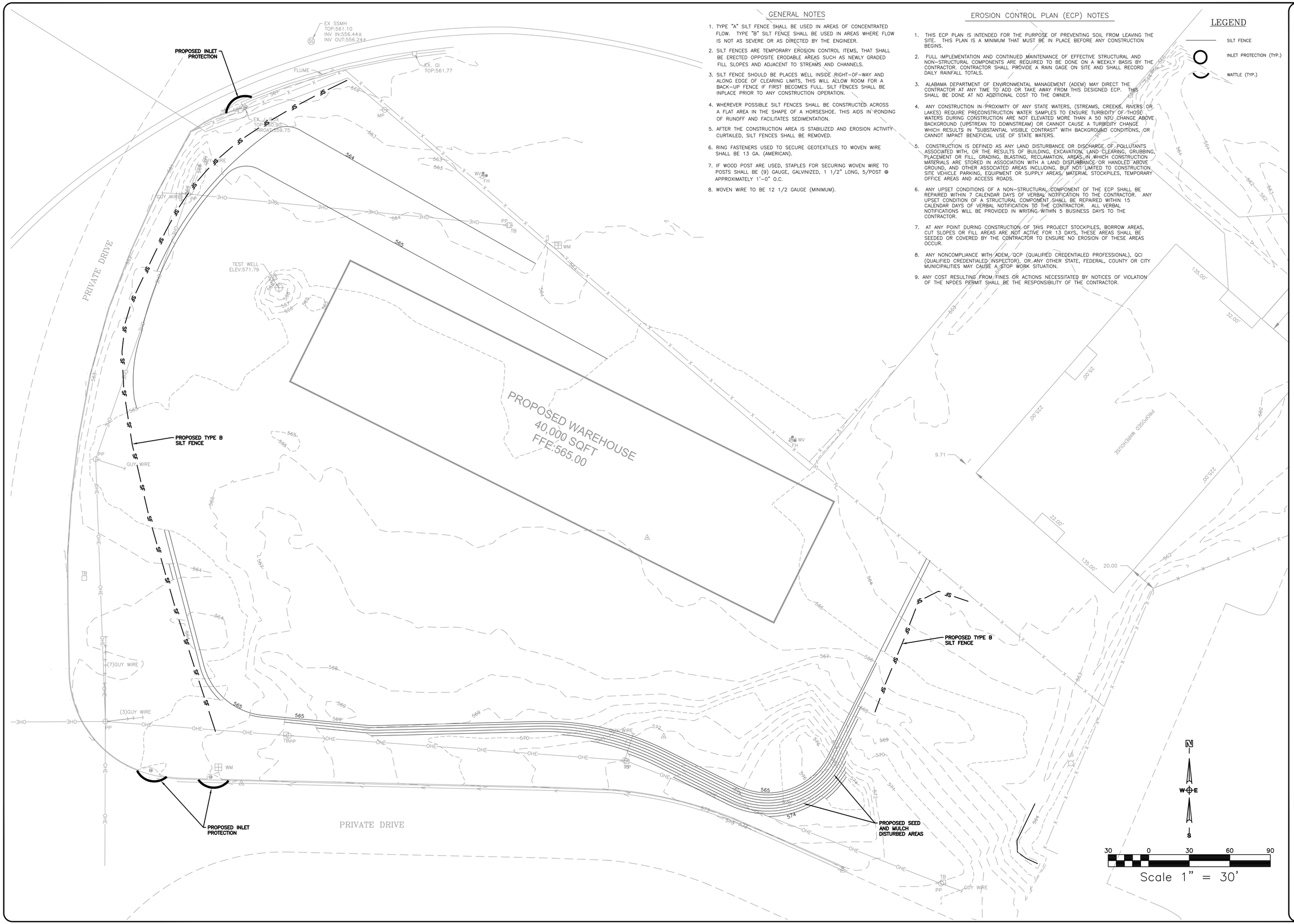

GENERAL NOTES

1. TYPE "A" SILT FENCE SHALL BE USED IN AREAS OF CONCENTRATED FLOW. TYPE "B" SILT FENCE SHALL BE USED IN AREAS WHERE FLOW IS NOT AS SEVERE OR AS DIRECTED BY THE ENGINEER.
2. SILT FENCES ARE TEMPORARY EROSION CONTROL ITEMS, THAT SHALL BE ERECTED OPPOSITE ERODABLE AREAS SUCH AS NEWLY GRADED FILL SLOPES AND ADJACENT TO STREAMS AND CHANNELS.
3. SILT FENCE SHOULD BE PLACES WELL INSIDE RIGHT-OF-WAY AND ALONG EDGE OF CLEARING LIMITS. THIS WILL ALLOW ROOM FOR A BACK-UP FENCE IF FIRST BECOMES FULL. SILT FENCES SHALL BE INPLACE PRIOR TO ANY CONSTRUCTION OPERATION.
4. WHEREVER POSSIBLE SILT FENCES SHALL BE CONSTRUCTED ACROSS A FLAT AREA IN THE SHAPE OF A HORSESHOE. THIS AIDS IN PONDING OF RUNOFF AND FACILITATES SEDIMENTATION.
5. AFTER THE CONSTRUCTION AREA IS STABILIZED AND EROSION ACTIVITY CURTAILED, SILT FENCES SHALL BE REMOVED.
6. RING FASTENERS USED TO SECURE GEOTEXTILES TO WOVEN WIRE SHALL BE 13 GA. (AMERICAN).
7. IF WOOD POST ARE USED, STAPLES FOR SECURING WOVEN WIRE TO POSTS SHALL BE (9) GAUGE, GALVINIZED, 1 1/2" LONG, 5/POST @ APPROXIMATELY 1'-0" O.C.
8. WOVEN WIRE TO BE 12 1/2 GAUGE (MINIMUM).

EROSION CONTROL PLAN (ECP) NOTES

1. THIS ECP PLAN IS INTENDED FOR THE PURPOSE OF PREVENTING SOIL FROM LEAVING THE SITE. THIS PLAN IS A MINIMUM THAT MUST BE IN PLACE BEFORE ANY CONSTRUCTION BEGINS.
2. FULL IMPLEMENTATION AND CONTINUED MAINTENANCE OF EFFECTIVE STRUCTURAL AND NON-STRUCTURAL COMPONENTS ARE REQUIRED TO BE DONE ON A WEEKLY BASIS BY THE CONTRACTOR. CONTRACTOR SHALL PROVIDE A RAIN GAGE ON SITE AND SHALL RECORD DAILY RAINFALL TOTALS.
3. ALABAMA DEPARTMENT OF ENVIRONMENTAL MANAGEMENT (ADEM) MAY DIRECT THE CONTRACTOR AT ANY TIME TO ADD OR TAKE AWAY FROM THIS DESIGNED ECP. THIS SHALL BE DONE AT NO ADDITIONAL COST TO THE OWNER.
4. ANY CONSTRUCTION IN PROXIMITY OF ANY STATE WATERS, (STREAMS, CREEKS, RIVERS OR LAKES) REQUIRE PRECONSTRUCTION WATER SAMPLES TO ENSURE TURBIDITY OF THOSE WATERS DURING CONSTRUCTION ARE NOT ELEVATED MORE THAN A 50 NTU CHANGE ABOVE BACKGROUND (UPSTREAN TO DOWNSTREAM) OR CANNOT CAUSE A TURBIDITY CHANGE WHICH RESULTS IN "SUBSTANTIAL VISIBLE CONTRAST" WITH BACKGROUND CONDITIONS, OR CANNOT IMPACT BENEFICIAL USE OF STATE WATERS.
5. CONSTRUCTION IS DEFINED AS ANY LAND DISTURBANCE OR DISCHARGE OF POLLUTANTS ASSOCIATED WITH, OR THE RESULTS OF BUILDING, EXCAVATION, LAND CLEARING, GRUBBING, PLACEMENT OR FILL, GRADING, BLASTING, RECLAMATION, AREAS IN WHICH CONSTRUCTION MATERIALS ARE STORED IN ASSOCIATION WITH A LAND DISTURBANCE OR HANDLED ABOVE GROUND, AND OTHER ASSOCIATED AREAS INCLUDING, BUT NOT LIMITED TO CONSTRUCTION SITE VEHICLE PARKING, EQUIPMENT OR SUPPLY AREAS, MATERIAL STOCKPILES, TEMPORARY OFFICE AREAS AND ACCESS ROADS.
6. ANY UPSET CONDITIONS OF A NON-STRUCTURAL COMPONENT OF THE ECP SHALL BE REPAIRED WITHIN 7 CALENDAR DAYS OF VERBAL NOTIFICATION TO THE CONTRACTOR. ANY UPSET CONDITION OF A STRUCTURAL COMPONENT SHALL BE REPAIRED WITHIN 15 CALENDAR DAYS OF VERBAL NOTIFICATION TO THE CONTRACTOR. ALL VERBAL NOTIFICATIONS WILL BE PROVIDED IN WRITING WITHIN 5 BUSINESS DAYS TO THE CONTRACTOR.
7. AT ANY POINT DURING CONSTRUCTION, OF THIS PROJECT STOCKPILES, BORROW AREAS, CUT SLOPES OR FILL AREAS ARE NOT ACTIVE FOR 13 DAYS, THESE AREAS SHALL BE SEEDED OR COVERED BY THE CONTRACTOR TO ENSURE NO EROSION OF THESE AREAS OCCUR.
8. ANY NONCOMPLIANCE WITH ADEM, QCP (QUALIFIED CREDENTIALED PROFESSIONAL), QCI (QUALIFIED CREDENTIALED INSPECTOR), OR ANY OTHER STATE, FEDERAL, COUNTY OR CITY MUNICIPALITIES MAY CAUSE A STOP WORK SITUATION.
9. ANY COST RESULTING FROM FINES OR ACTIONS NECESSITATED BY NOTICES OF VIOLATION OF THE NPDES PERMIT SHALL BE THE RESPONSIBILITY OF THE CONTRACTOR.

LEGEND

- SILT FENCE
- INLET PROTECTION (TYP.)
- WATTLE (TYP.)

PUGH WRIGHT MCANALLY INC.
CIVIL ENGINEERS
310 8th AVENUE NE – PO BOX 2419 – DECATUR, AL – (256) 353-3837
Pugh Wright McAnally, Inc. www.pughwrightmcanally.com

REVISIONS

Rev#	Description	Date
5		
4		
3		
2		
1		

DECATUR-MORGAN
NEW MFC PORT ALLOY STORAGE WAREHOUSE
MORGAN COUNTY PORT
SECTION 3, TOWNSHIP 5 SOUTH, RANGE 5 WIEST
DECATUR, MORGAN COUNTY, ALABAMA

EROSION CONTROL PLAN

Date: 10-31-2016
Drawn By: NLT
Approved By: HBM
Scale: 1"=30'

Sign/Seal
ALABAMA
LICENSED
NO. 30456
PROFESSIONAL
4-1-2020
ENGINEER
HOWARD BRYAN MCANALLY
DRAFT

Job Number:
552-20

Sheet Number:
C400

Attachment A.1

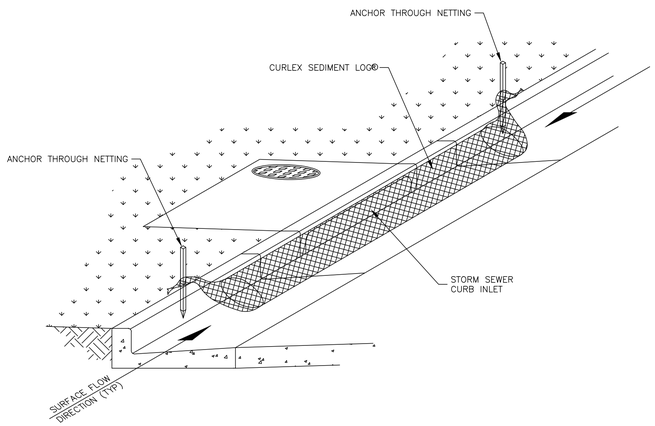

CURB INLET PROTECTION

NOT TO SCALE

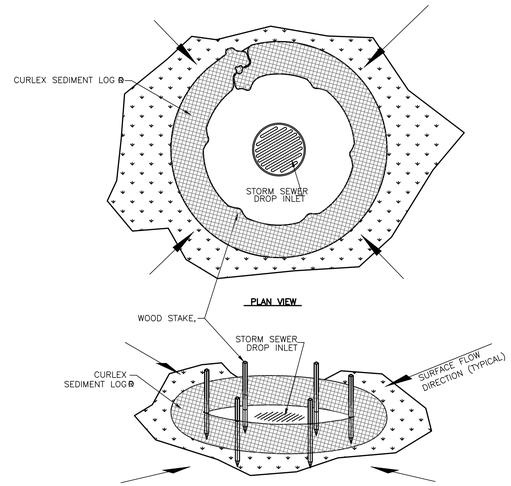

INLET PROTECTION LOGS

NOT TO SCALE

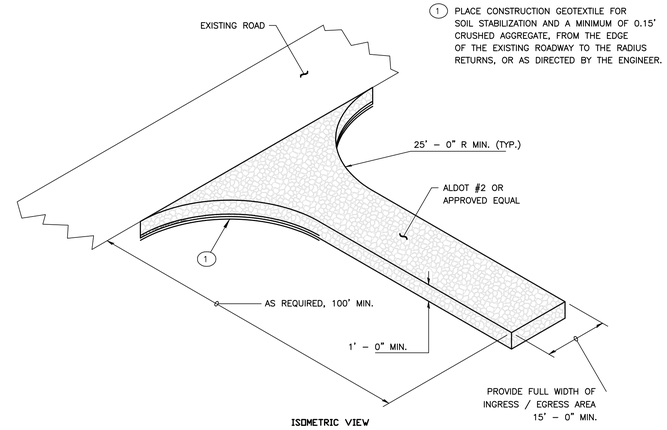

STABILIZED CONSTRUCTION ENTRANCE

NOT TO SCALE

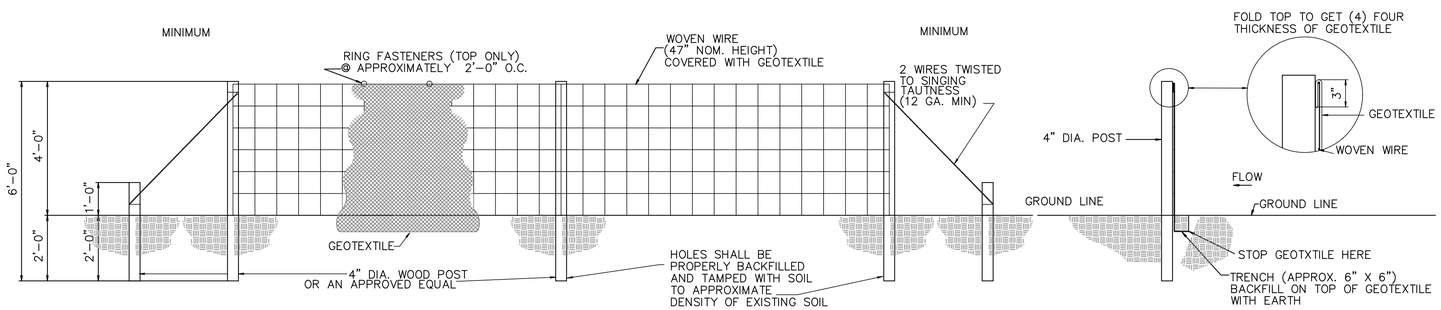

SILT FENCE – TYPE "A"

PLAN

SECTION

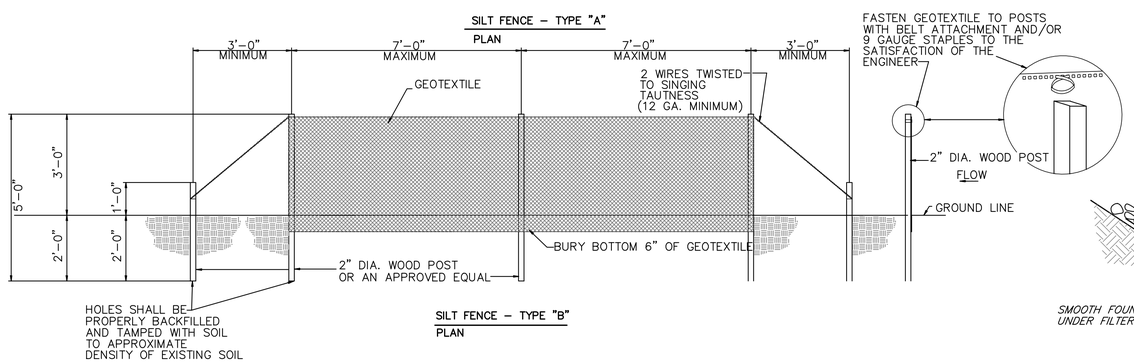

SILT FENCE – TYPE "B"

PLAN

SILT FENCE INSTALLATION

NOT TO SCALE

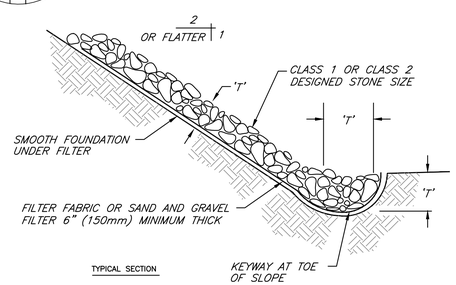

TYPICAL SECTION

RIP–RAP PROTECTION TYP. DETAIL

NOT TO SCALE

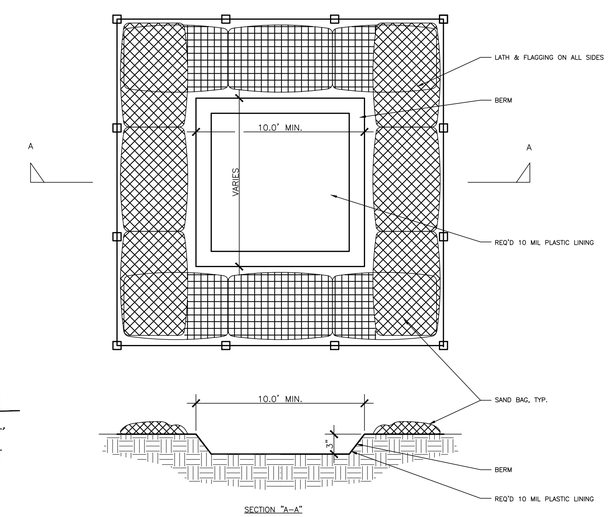

CONCRETE WASHOUT DETAIL

NOT TO SCALE

NOTE:
"T" = THICKNESS: THICKNESS SHALL BE DETERMINED BY THE ENGINEER.

MINIMUM THICKNESS SHALL BE 1.5x THE MAXIMUM STONE DIAMETER, NEVER LESS THAN 6" (150mm).

PUGH WRIGHT MCANALLY INC.
CIVIL ENGINEERS
310 8th AVENUE NE – PO BOX 2419 – DECATUR, AL – (256) 353-3837
Pugh Wright McAnally, Inc. www.pughwrightmcanally.com

REVISIONS

Rev#	Description	Date
5		
4		
3		
2		
1		

DECATUR-MORGAN
NEW MFC PORT ALLOY STORAGE WAREHOUSE
MORGAN COUNTY PORT
SECTION 3, TOWNSHIP 5 SOUTH, RANGE 5 WEST
DECATUR, MORGAN COUNTY, ALABAMA

EROSION CONTROL DETAILS

Date: 10-31-2016
Drawn By: NLT
Approved By: HBM
Scale: NTS

Sign/Seal
ALABAMA
REGISTERED
NO. 30456
PROFESSIONAL
4-1-2020
ENGINEER
NATHAN L. TAYLOR

DRAFT

Job Number:
552–20

Sheet Number:
C500

Attachment A.2

Watco Companies
315 West 3rd Street
Pittsburg, KS 66762
Phone: (620)-231-2230
Fax: (620)-231-8102

Jeremy Nails
Decatur Morgan County Port Authority
256-353-1213
jwn@mceda.org

Mr. Nails,

This letter is to inform the Decatur Morgan County Port Authority of the findings of Watco Companies' strategic market and data analysis of the North Alabama Steel and Alloy market. Watco believes that the result of this market research supports the construction of additional warehousing space at the Mallard Creek Industrial Park. Please see the findings below:

- Approximately 82,000 tons of alloys come into Decatur annually, 100% of this volume is currently trucked to offsite storage areas;
- Alloys delivered to Decatur get distributed to locations in 18 different states;
- The current offsite warehousing is not rail served; this warehouse would be able to provide that option potentially reducing the truck traffic from the facility. This warehouse could result in the removal of over 3700 short range and 745 long range trucks moves annually (basis 20% of annual volume being loaded to rail)
- Just in the alloy market, this warehouse could provide an additional $16,800 in annual revenue for the Port Authority (incremental 15 barges);
- Beyond the alloy market this warehouse will offer additional growth opportunities in other markets such as steel, rough grains and project cargo such as weather sensitive components related to the auto manufacturing industry.

Watco Companies believes that partnering in the construction of a 40,000 square foot warehouse would offer a more efficient and reliable option in having an "on dock" storage warehouse. It would reduce the expense of having to immediately move the product to an offsite location as well as potentially increasing the barge turn times.

- The project will provide the Decatur River Port with additional inside storage capacity which is in high demand and will continue to be as the Mazda-Toyota project progresses;
- This project will ensure Decatur River Port will be able to continue offering the most efficient competitive service to the alloy and steel customers which has used DRP since the early 1980's;
- Recently we have seen pressure from warehouses in Memphis, TN and Vicksburg, MS competing for the alloy tonnages with available covered storage.

Watco will support this project and would emphasize the importance of adding covered storage to the port facilities. We are seeing warehouse space become more attractive and vital to not only attracting new business but in retaining business in an ever-evolving competitive regional market. If any follow up information is needed or requested, please feel free to contact me directly (215) 260-8652

Sincerely,

Len Crescenzo
Sales Director
Len.Crescenzo@WatcoCompanies.com
(215) 260-8652

Attachment A.3

Tennessee Valley Authority, Post Office Box 1010, Muscle Shoals, Alabama 35662-1010

April 1, 2020

Mr. Jeremy Nails
Executive Director
Decatur-Morgan County Port Authority
300 Market Street Northeast, Suite 2
Decatur, Alabama 35601

Dear Mr. Nails:

We have reviewed your March 27, 2020 request for a proposed 40,000 square foot warehouse that the Decatur -Morgan County Port Authority (DMCPA) will construct for operation at the WATCO site that is designated in the Tennessee Valley Authority (TVA) records as TVA Tract No. XTWR-96BT. On June 21, 1990, TVA granted an easement for Tract No. XTWR-96BT to the DMCPA for public use barge terminal purposes.

We consent to the new proposed warehouse building subject to the conditions and the understanding that WATCO shall continue to be responsible for the performance of all obligations of the June 21, 1990, Grant of Easement for the construction, operation, and maintenance of a public use barge terminal over 41.82 acres referenced as Tract XTWR-96BT. Paragraph ten of this instrument states that this easement is subject to an existing easement for industrial site development purposes, XTWR-96BT.

We appreciate the opportunity to work with you and look forward to working with you in the future. If you have any additional questions or concerns, please feel free to contact me at (256) 386-3456, or by email, jkaustin@tva.gov.

Sincerely,

Kenley Austin
Program Manager
Reservoir Land Use & Permitting

the City OF OPPORTUNITY

CITY OF DECATUR Alabama

Attachment A.4

C. Wallace Terry
Director of Development

April 3rd 2020

Mr. Jeremy Nails
Decatur Morgan County Port Authority
Decatur, Alabama 35601

Dear Mr. Nails;

It is my understanding that the Decatur Morgan County Port Authority is in the process of applying for a grant to construct a new 40,000 sq ft warehouse. The details that are shown in exhibit "A" are similar to the cotton warehouse project in size, use and location as referenced in exhibit "B" and "C". This new project will be required to follow the same approval process as the cotton warehouse project shown in the various exhibits which was approved without conditions. I am not aware of any issues that exist which would not have been a part of the cotton warehouse. It is my belief it will be received favorably as another good addition to our port. We commit to working for of an approval of this project as we did last year for the cotton seed warehouse and hopefully with the same outcome.

We look forward to receiving the necessary material in the coming days.

Respectfully;

C. Wallace Terry
Director of Development

Building Department
Community Planning
Engineering Department
Planning Department

Decatur City Hall • 402 Lee Street, NE • Post Office Box 488 • Decatur, AL 35602-0488
Phone (256) 341-4505 • Fax (256) 341-4969 • www.DecaturAlabamaUSA.com

Ex A

Attachment A.4

DRP Warehouse Project
40,000 sqft

1. Site work includes building the proposed building area up 24" for the building pad placed and compacted.

2. Includes 11,445syds of 10" Dense grade base and 4" of Asphalt Paving.

3. Includes 1,330lf of 8' high chain link fencing and gates along the outside perimeter of the property.

4. Supply and install the foundation and slab for a 100' x 400' x 24' Clear Span Pre-Engineered Metal Building. Building slab will be steel reinforced at 8" thick.

5. Supply and install a 100' x 400' x 24' Clear Span Pre-Engineered Metal Building with 4ea 20' x 20' motor operated doors and a 12" x 72" high perimeter concrete containment wall for material stop barrier.

6. Includes 4ea 20' x 20' garage doors. One on the center west side, One on the center east side, and one on the north side on the northwest corner and one on the south side on the southwest corner. Man doors will be place at OSHA standard intervals along exterior walls of the warehouse.

7. Building includes 26ga metal wall panels insulated 4" with a 24ga 4" Insulated Standing Seam roof.

8. Includes 4ea exterior concrete aprons at the overhead doors with 4ea 6" Guard-post bollards at each.

9. Building to be heated with propane direct infrared spot heaters as well as ventilated as required by code.

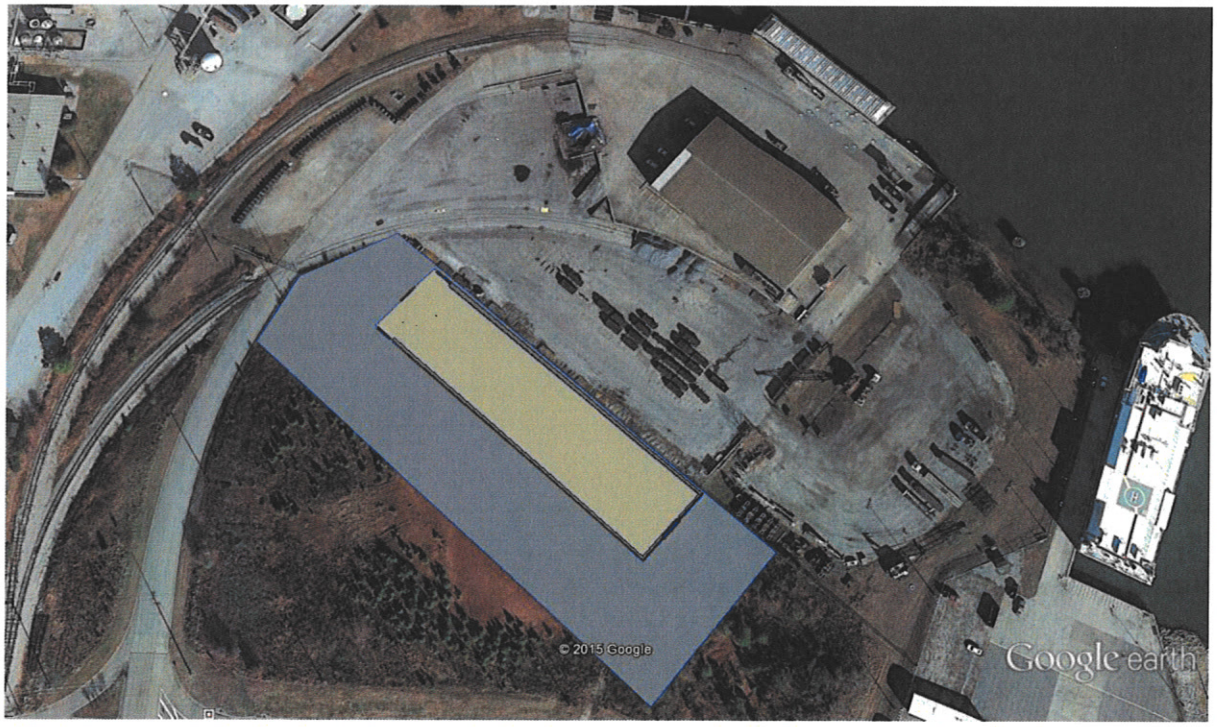

Ex B

on a CHARMING SCALE

Attachment A.4

Planning Department

October 23, 2019

WATCO Companies
1802 Red Hat Rd. NW
Decatur, AL 35601

RE: Site Plan 589-19

Dear Sir or Madam:

The Planning Commission conditionally approved your requests October 22, 2019.

The City of Decatur **Subdivision Regulations** require that all requests be completed within **one year** of approval or they become null and void.

Attached is a copy of the minutes with the required conditions, related to your request.

If you have any questions, please notify the Planning Department at 256-341-4720.

Sincerely,

Karen J. Smith

Karen J. Smith, Planner

Attachment

Planning Department – City of Decatur
308 Cain Street, NE • Post Office Box 488 • Decatur, AL 35602-0488
Phone (256) 341-4720 • Fax (256) 341-4727 • www.DecaturAlabamaUSA.com

Ex C

Attachment A.4

COMMENTS AND RECOMMENDATIONS FROM TECHNICAL REVEIW COMMITTEE:

1. Payment of recording fees
2. Extend 8" water main to tract 1
3. 10' transformer easement on either side where it crosses "axe handle" and 5' easement to the road- Subject to approval from Joe Wheeler Electric Membership Corporation (JWEMC)
4. Show the field lines on the survey

Pt. of Info:

1. Any relocation of utilities will be at the owner's expense
2. 30' of road frontage will be needed for the "axe handle" if it is to be used to for access to the property

FILE NAME OR NUMBER: Site Plan 589-19

APPLICANT: Pugh Wright McAnally for WATCO companies

PROPERTY OWNER/PROPERTY ADDRESS: Pugh Wright McAnally for WATCO companies

REQUEST: Site plan approval to construct a Cotton seed warehouse in the port area

ACRES: 86.83 **CURRENT ZONE:** M2 General Industry

NEW ZONE: 86.83 **CURRENT LANDUSE:** Vacant

PROPOSED LAND USE: Warehousing

ONE DECATUR FUTURE LAND USE: General industrial / agricultural

ONE DECATUR STREET TYPOLOGY: Local street with heavy truck traffic

COMMENTS AND RECOMMENDATIONS FROM TECHNICAL REVEIW COMMITTEE:

Approval with no conditions

Pt. of Info:

Any relocation of utilities will be at the owner's expense.

Attachment A.5

CERTIFICATE OF INCORPORATION
OF
DECATUR - MORGAN COUNTY
PORT AUTHORITY

05474

TO: THE HONORABLE JUDGE OF PROBATE
OF MORGAN COUNTY, ALABAMA

The undersigned, Horace W. Broom, C. W. Nelson and Orval D. Proctor, each of whom is over the age of nineteen years, desiring to organize a body corporate under the provisions of Act No. 80-647 enacted at the 1980 Regular Session of the Legislature of Alabama, and Chapter 94 of Title 11 of the Code of Alabama 1975, as amended, and being all of the incorporators of the corporation hereby organized, do make, sign and file this certificate of incorporation as follows:

(1) The names and resident addresses of the applicants are as follows:

NAME	RESIDENT ADDRESS
Horace W. Broom	606 Barkley Street Hartselle, Alabama 35640
C. W. Nelson	2012 Pennylane, S.E. Decatur, Alabama 35601
Orval D. Proctor	512 Curry Street Hartselle, Alabama 35640

Each of the aforesaid three applicants is a duly qualified elector of and taxpayer in Morgan County, Alabama (herein called "the County").

(2) The name of the corporation is and shall be DECATUR - MORGAN COUNTY PORT AUTHORITY.

(3) Permission to organize the corporation has been granted by resolution duly adopted by the governing body of the County on January 25, 1982; by resolution duly adopted by the governing body of the City of Decatur, Alabama (herein called "the City"), on February 1, 1982; and by the Alabama State Docks Department (acting by and through the director of state docks) on April 19, 1982.

(4) The principal office of the corporation shall be located at 230 East Moulton Street, Decatur, Alabama, and its post office address shall be c/o Caddell, Shanks, Harris, Moores & Murphree, Post Office Box 1727, Decatur, Alabama 35602.

Attachment A.5

(5) The corporation is organized for the purposes set forth in Act No. 80-647 enacted at the 1980 Regular Session of the Legislature of Alabama, and Chapter 94 of Title 11 of the Code of Alabama 1975, and shall have all powers and authorities specified therein and in any amendment thereof heretofore or hereafter made, and all other powers and authorities heretofore or hereafter conferred upon corporations organized under said Act No. 80-647 and said Chapter 94 (and upon corporations generally) by the laws of Alabama not in conflict with the said Act No. 80-647 and the said Chapter 94, as heretofore or hereafter amended; provided, however, that the corporation shall not have the power to acquire, whether by purchase, construction, exchange, gift, lease or otherwise, or to improve, equip and furnish any "project" (as that term is defined and used in said Act No. 80-647 and said Chapter 94, as heretofore or hereafter amended) without the consent of (a) the governing body of the County and (b) the governing body of the City, such consent on the part of each such governing body to be evidenced by a duly adopted resolution thereof.

Attachment A.5

(6) The geographical boundaries of the corporation's jurisdiction shall be situated within the boundaries of the County, shall extend along the banks of the Tennessee River (a navigable river) and inland for a distance of not more than three miles from said river, and are more particularly described as follows:

A tract or parcel of land containing approximately 2,100 acres (acreage estimated by planimetric method) being within that portion of Sections 7 and 8 lying north of the right-of-way for Alabama Highway No. 20, that portion of Sections 5 and 6 not presently a part of TVA-Wheeler Reservation and that portion of the extreme westerly side of Sections 4 and 9 included within the right-of-way for Red Hat Road (Morgan County Road No. 7), Township 5 South, Range 5 West, AND ALSO that portion of Section 32 not presently a part of TVA-Wheeler Reservation and not below the 556.33 foot contour of Wheeler Reservoir and within a portion of the West half of Section 33 not below the 556.33 foot contour of Wheeler Reservoir, Township 4 South, Range 5 West, all above property lying within Morgan County, Alabama, and being more particularly described as follows:

Beginning at TVA Monument No. 182-100 on the north boundary of Section 4, Township 5 South, Range 5 West, Morgan County, Alabama (said monument being S 89° 05' E 2,102 feet from the NW corner of said Section 4 and TVA Monument No. 47) and running thence N 89° 05' W along the north boundary of said Section 4 and the south boundary of TVA-Wheeler Reservation for a dis-

tance of 2,022 feet, more or less, to a point where said north boundary of Section 4 intersects the east margin of the right-of-way for Red Hat Road (Morgan County Road No. 7), if extended (said point being also S 89° 05' E 80 feet, more or less, from TVA Monument No. 47); thence running south along said easterly margin of the right-of-way for Red Hat Road (said right-of-way being generally parallel with the west boundaries of Sections 4 and 9, Township 5 South, Range 5 West), for a distance of 10,420 feet, more or less, to a point where the east margin of the right-of-way for Red Hat Road intersects the north margin of the right-of-way for Alabama Highway No. 20 (U.S. Highway No. 72-A); thence running first westerly, thence northwesterly, thence westerly again, all along the northerly margin of the right-of-way for Alabama Highway No. 20 for a distance of 12,500 feet, more or less, to a point where the northerly margin of said right-of-way intersects the west boundary of Section 6, Township 5 South, Range 5 West (said boundary of Section 6 also being the division line between Ranges 5 and 6 West and between Lawrence and Morgan Counties); thence running north along the west boundary of said Section 6 for a distance of 5,200 feet, more or less, to the NW corner of said Section 6 and TVA property corner No. 1; thence following the TVA-Wheeler Reservation boundary as follows:
S 89° 40' E 1,331 feet to TVA Monument No. 57;
S 89° 45' E 2,666 feet to TVA Monument No. 182-81;
S 0° 10' E 958 feet to TVA Monument No. 182-80;
S 89° 45' E 1,312 feet to TVA Monument No. 182-79WC;
S 89° 45' E 20 feet to TVA property corner No. 182-79; S 0° 10' E 369 feet to TVA Monument No. 49; S 0° 20' E 330 feet to TVA Monument No. 48; S 89° 25' E 674 feet to TVA Monument No. 182-76; North 1,646 feet to TVA Monument No. 182-77; S 88° 55' E 1,141 feet to TVA Monument No. 56; S 89° 55' E 873 feet to TVA Monument No. 57; S 0° 16' W 216.4 feet to TVA Monu-

ment No. 182-102; S 89° 53' 55" E 226.1 feet to TVA Monument No. 182-103; N 0° 35' 33" E 308.0 feet to TVA Monument No. 182-104; N 80° 35' 15" W 511.8 feet to TVA Monument No. 182-105; N 68° 07' 26" W 1,211.8 feet to TVA Monument No. 182-106; N 8° 34' 22" E 416.1 feet to TVA Monument No. 182-107; N 44° 44' 51" W 930.6 feet to TVA Monument No. 182-108; N 89° 30' 12" W 726.9 feet to TVA property corner No. 182-94; N 0° 38' W 690 feet to TVA property corner No. 182-95; thence leaving the TVA-Wheeler Reservation boundary and continuing N 0° 38' W for a distance of 500 feet, more or less, to a point where said bearing intersects the 556.33 foot contour of Wheeler Reservoir; thence following said 556.33 foot contour with its various meanders as it runs upstream and along the southerly bank of Wheeler Reservoir to TVA property corner No. 182-101 (said property corner being at a point where said 556.33 foot contour of Wheeler Reservoir intersects a bearing of N 0° 55' E measured from the point of beginning of the herein described tract); thence running S 0° 55' W for a distance of 11 feet, more or less, to TVA Monument No. 182-101WC; thence running S 0° 55' W for a distance of 1,241 feet to the point of beginning.

(7) The duration of the existence of the corporation shall be perpetual, unless it shall be sooner dissolved by proceedings taken pursuant to said Act No. 80-647 and said Chapter 94.

Attachment A.5

(8) The corporation shall be a non-profit corporation, and no part of the net earnings thereof shall inure to any individual or private corporation.

IN WITNESS WHEREOF, the undersigned incorporators have hereunto subscribed their signatures this 27TH day of APRIL, 1982.

Horace W Broom
HORACE W. BROOM

C. W. Nelson
C. W. NELSON

Orval D. Proctor
ORVAL D. PROCTOR

Attachment A.5

STATE OF ALABAMA)
:
COUNTY OF MORGAN)

BOOK 28 PAGE 361

I, JOHN A. CADDELL, a Notary Public in and for said county in said state, hereby certify that HORACE W. BROOM, whose name is signed to the foregoing Certificate of Incorporation and who is known to me, acknowledged before me on this day that, being informed of the contents of the said Certificate of Incorporation, he executed the same voluntarily.

GIVEN under my hand and official seal of office, this 27TH day of APRIL, 1982.

JOHN A. CADDELL NOTARY PUBLIC STATE OF ALABAMA

John A. Caddell
Notary Public
My Commission Expires: 9-7-82

[NOTARIAL SEAL]

STATE OF ALABAMA)
:
COUNTY OF MORGAN)

I, JOHN A. CADDELL, a Notary Public in and for said county in said state, hereby certify that C. W. NELSON, whose name is signed to the foregoing Certificate of Incorporation and who is known to me, acknowledged before me on this day that, being informed of the contents of the said Certificate of Incorporation, he executed the same voluntarily.

GIVEN under my hand and official seal of office, this 27TH day of APRIL, 1982

JOHN A. CADDELL NOTARY PUBLIC STATE AT LARGE ALABAMA

John A. Caddell
Notary Public
My Commission Expires: 9-7-82

[NOTARIAL SEAL]

Attachment A.5

STATE OF ALABAMA)
:
COUNTY OF MORGAN)

BOOK 28 PAGE 362

I, JOHN A. CADDELL, a Notary Public in and for said county in said state, hereby certify that ORVAL D. PROCTOR, whose name is signed to the foregoing Certificate of Incorporation and who is known to me, acknowledged before me on this day that, being informed of the contents of the said Certificate of Incorporation, he executed the same voluntarily.

GIVEN under my hand and official seal of office, this 27TH day of APRIL, 1982.

JOHN A. CADDELL
NOTARY PUBLIC
STATE AT LARGE ALABAMA

John A. Caddell
Notary Public
My Commission Expires: 9-7-82

[NOTARIAL SEAL]

This instrument was prepared by
David W. Spurlock
920 First Alabama Bank Building
Birmingham, Alabama 35203

STATE OF ALA. MORGAN CO.
I CERTIFY THIS
INSTRUMENT WAS FILED
1982 APR 27 AM 11:25
U.C.C. FILE NUMBER OR
BOOK & PAGE AS SHOWN ABOVE
JUDGE OF PROBATE

1099

Attachments B, Project Budget

Attachment B.1 **Engineering Letter and Opinion of Probable Costs**

Attachment B.2 **Port Authority Grant Application Resolution**

Attachment B.3 **Port Authority Financial Statements Fiscal Year 2018-2019**

PUGH WRIGHT MCANALLY
CIVIL ENGINEERS
310 8TH AVENUE NE | DECATUR, ALABAMA 35601 | POST OFFICE BOX 2419 | 35602
256.353.3937P 256.350.2285F

Attachment B.1

April 2, 2020

Mr. Jeremy Nails, Executive Director
Morgan County Economic Development Association
Market Street NE
Decatur, AL 35601

RE: ***Opinion of Probable Cost for a New DRP 40,000 Square Foot Warehouse at the Mallard-Fox Creek Port Facility, Decatur, Morgan County, AL***

Jeremy,

Pugh Wright McAnally, Inc. (PWM) has reviewed the available layout provided for the above-mentioned project. Per the conference call on 2-27-2020 between PWM, Morgan County IDB, and Watco Companies attached you should find a preliminary civil set of plans along with estimated construction cost for your use. We have consulted with several suppliers and contractors to determine the provided minimum requirements and cost for the potential development. We have rounded these costs up to even dollar increments, included the engineering and project management fee of 3.75% of the construction cost, and included a 5% contingency for any unforeseen items.

Should you require any additional information from PWM, please do not hesitate to contact me at (256) 353-3937.

Respectfully,

Nathan Tomberlin, PE, Lead Engineer
Pugh Wright McAnally, Inc.

ALABAMA LICENSED NO. 30456 PROFESSIONAL ENGINEER NATHAN L. TOMBERLIN

Attachment B.1

OPINION OF PROBABLE COST 4-2-2020
MALLARD-FOX CREEK PORT - 40,000SF DRP WAREHOUSE

SCOPE ITEM	DESCRIPTION OF WORK	QUANTITY	UNIT	UNIT PRICE	AMOUNT
1	Mobilization	1	LUMP SUM	$ 45,000.00	$ 45,000.00
2	Clearing/Grubbing/Topsoil Removal	1	LUMP SUM	$ 14,500.00	$ 14,500.00
3	Unclassified Excavation	18,500	CUBIC YARDS	$ 6.50	$ 120,250.00
4	Dense Graded Base	5,500	TONS	$ 8.00	$ 44,000.00
5	Erosion Control/CBMPP/Inspections	1	LS	$ 14,500.00	$ 14,500.00
6	11" Build Slab/5000PSI Concrete/6560 Steel Fibers @ 44lbs/cy	40,000	SQUARE FOOT	$ 11.15	$ 446,000.00
7	Thickened Slab Footings	500	CUBIC YARDS	$ 350.00	$ 175,000.00
8	Pour in Place Concrete Reinforcement Containment Wall	200	CUBIC YARDS	$ 350.00	$ 70,000.00
9	40,000 SF Pre-Eng. Metal Bldg. & Erection	41,600	SQUARE FOOT	$18.00	$ 748,800.00
10	24" Class III RCP Storm Pipe	550	LINEAR FEET	$66.00	$ 36,300.00
11	18" HDPE Roof Leader Collection	940	LINEAR FEET	$55.00	$ 51,700.00
12	Electrical Suppy & Service to Building	1	LUMP SUM	$60,000.00	$ 60,000.00
13	Reinforced Storm Sewer Junction Box/Grate Box	15	EACH	$3,500.00	$ 52,500.00
14	Materials & Soil Testing	1	LUMP SUM	$7,500.00	$ 7,500.00
15	Engineering Design and Project Management (3.75% of Construction Cost)	1	LUMP SUM	$ 70,726.88	$ 70,726.88
16	Permits & Fees	1	LUMP SUM	$5,000.00	$ 5,000.00
	SUBTOTAL				**$ 1,961,776.88**
				5% Contingency	**$98,088.84**
				TOTAL OPINION OF PROBABLE COST:	**$2,059,865.72**

Attachment B.2

DECATUR MORGAN COUNTY | PORT AUTHORITY

DECATUR-MORGAN COUNTY PORT AUTHORITY
ADECA GRANT APPLICATION RESOLUTION

A resolution of the Decatur-Morgan County Port Authority Board of Directors agreeing to apply for a financial assistance grant through the Alabama Inland Port Infrastructure Program Second Round, administered by the Alabama Department of Economic and Community Affairs (ADECA) to finance additional storage and warehouse facilities at the Mallard-Fox Creek Industrial Park and Port Facilities located in Decatur, Morgan County, Alabama. Be it further resolved that the Decatur-Morgan County Port Authority Board authorizes the Executive Director to sign all documents relating to the Alabama Inland Port Infrastructure Program grant.

PASSED and APPROVED this 3rd day of April, 2020.

Harvey Pride, Jr., President

Attest:

Tim Lovelace, Secretary/Treasurer

300 MARKET ST NE SUITE 2 · DECATUR, AL 35601 · USA
p +1 256.353.1213 · f +1 256.353.0407 · WWW.MCEDA.ORG

Attachment B.3

DECATUR-MORGAN COUNTY PORT AUTHORITY

FINANCIAL STATEMENTS AND REQUIRED SUPPLEMENTARY INFORMATION

SEPTEMBER 30, 2019 AND 2018

BrandBlackwell&Co.,PC
CERTIFIED PUBLIC ACCOUNTANTS

Attachment B.3

TABLE OF CONTENTS

Decatur-Morgan County Port Authority September 30, 2019 and 2018

	Page No.
Independent Accountant's Review Report	1
Management's Discussion and Analysis	2
Statements of Net Position	4
Statements of Revenues, Expenses and Changes in Net Position	5
Statements of Cash Flows	6
Notes to Financial Statements	7

Attachment B.3

INDEPENDENT ACCOUNTANT'S REVIEW REPORT

Board of Directors
Decatur-Morgan County Port Authority
Decatur, Alabama

We have reviewed the accompanying financial statements of the governmental activities, the business-type activities, and the aggregate remaining fund information of the Decatur-Morgan County Port Authority (a non-profit public corporation) as of and for the years ended September 30, 2019 and 2018, and the related notes to the financial statements, which collectively comprise the Port Authority's basic financial statements as listed in the table of contents. A review includes primarily applying analytical procedures to management's financial data and making inquiries of management. A review is substantially less in scope than an audit, the objective of which is the expression of an opinion regarding the financial statements as a whole. Accordingly, we do not express such an opinion.

Management's Responsibility for the Financial Statements

Management is responsible for the preparation and fair presentation of the financial statements in accordance with accounting principles generally accepted in the United States of America; this includes the design, implementation, and maintenance of internal control relevant to the preparation and fair presentation of financial statements that are free from material misstatement whether due to fraud or error.

Accountant's Responsibility

Our responsibility is to conduct the review engagement in accordance with Statements on Standards for Accounting and Review Services promulgated by the American Institute of Certified Public Accountants. Those standards require us to perform procedures to obtain limited assurance as a basis for reporting whether we are aware of any material modifications that should be made to the financial statements for them to be in accordance with accounting principles generally accepted in the United States of America. We believe that the results of our procedures provide a reasonable basis for our conclusion.

Accountant's Conclusion

Based on our review, we are not aware of any material modifications that should be made to the accompanying financial statements in order for them to be in accordance with accounting principles generally accepted in the United States of America.

Required Supplementary Information

Accounting principles generally accepted in the United States of America require that management's discussion and analysis on pages 2 and 3 be presented to supplement the basic financial statements. Such information, although not a part of the basic financial statements, is required by the Governmental Accounting Standards Board who considers it to be an essential part of financial reporting and for placing the basic financial statements in an appropriate operational, economic, or historical context. The information is a representation of management. We have not audited or reviewed such required supplementary information, and accordingly, we do not express an opinion, a conclusion, nor provide any form of assurance on it.

Brand, Blackwell & Company, P.C.

Brand, Blackwell & Company, P.C.
Certified Public Accountants
Huntsville, Alabama
January 24, 2020

BRANDBLACKWELL.COM • 256.536.3513 PH • 256.534.4771 FAX
4930 CORPORATE DRIVE, SUITE A • HUNTSVILLE, ALABAMA 35805

MANAGEMENT'S DISCUSSION & ANALYSIS

Decatur-Morgan County Port Authority September 30, 2019

OVERVIEW OF THE FINANCIAL STATEMENTS

This annual financial report consists of two parts: the basic financial statements and Management's Discussion and Analysis (this section). Budgetary highlights are not presented since the Authority does not have a legally adopted budget. The Authority is a self-supporting entity and follows enterprise fund reporting; accordingly, the financial statements are presented using the economic resources measurement focus and the accrual basis of accounting. Enterprise fund statements offer short-term and long-term financial information about the activities and operations of the Authority.

The *Statements of Net Position* present information on assets and liabilities, with the difference reported as net position. Increases and decreases in net position serve as a useful indicator of improving or deteriorating financial position.

The *Statements of Revenues, Expenses and Changes in Net Position* measure the success of the Port Authority's operations over the reporting period and can be used to determine whether the Port Authority is recovering its costs through rents and wharfage fees.

The *Statements of Cash Flows* report cash receipts, cash payments and changes in cash resulting from operating, investing and financing activities and provides information on how cash was obtained and used during the reporting period.

CONDENSED FINANCIAL INFORMATION

	9/30/2019	9/30/2018	9/30/2017
Current Assets	$ 2,032,309	$ 1,919,727	$ 1,806,588
Deferred Outflows of Resources	-	-	-
Capital Assets	2,829,013	2,927,252	3,030,766
Total Assets	$ 4,861,322	$ 4,846,979	$ 4,837,354
Current Liabilities	-	-	-
Deferred Inflows of Resources	-	-	-
Long-Term Debt	-	-	-
Total Liabilities	-	-	-
Net Position			
Invested in Capital Assets	2,829,013	2,927,252	3,030,766
Unrestricted	2,032,309	1,919,727	1,806,588
Total Net Position	$ 4,861,322	$ 4,846,979	$ 4,837,354
Revenues	$ 349,100	$ 363,922	$ 328,582
Expenses	339,527	354,297	358,926
Change in Net Position before Contributions	9,573	9,625	(30,344)
Contributions	4,770	-	-
Change in Net Position	$ 14,343	$ 9,625	$ (30,344)

See independent accountant's review report.

MANAGEMENT'S DISCUSSION & ANALYSIS

Decatur-Morgan County Port Authority September 30, 2019

THE AUTHORITY'S OVERALL FINANCIAL POSITION AND RESULTS OF OPERATIONS

The Authority operates docks and industrial parks located in Morgan County, Alabama. The Authority's revenue is primarily generated through the development of these properties, rent and wharfage fees. The Authority works closely with various organizations and local governments to promote economic and industrial development in Morgan County, Alabama.

The Authority experienced net income of $14,343 and $9,625 for the periods ending September 30, 2019 and 2018 respectively, compared to a net loss of $30,344 for the period ending September 30, 2017. Depreciation is the Authority's largest expense, in the amount of $103,009 (30%), $103,873 (29%), and $104,232 (29%) of total expenses for the years ending September 30, 2019, 2018 and 2017, respectively.

CAPITAL ASSETS AND LONG-TERM DEBT

As of September 30, 2019, the Authority had $2,829,013 invested in property, buildings, furniture, and equipment. The Authority has no debt.

ADDITIONAL INFORMATION

This discussion and analysis is to provide customers, the Board of Directors, and the various local governments in Morgan County, Alabama, with a general overview of the Authority's finances. For additional information contact the Decatur-Morgan County Port Authority, 300 Market Street, N.E., Decatur, Alabama 35601.

Attachment B.3

STATEMENTS OF NET POSITION

Decatur-Morgan County Port Authority — September 30, 2019 and 2018

ASSETS AND DEFERRED OUTFLOWS OF RESOURCES

	2019	2018
CURRENT ASSETS		
Cash and equivalents	$ 1,447,186	$ 1,304,246
Certificates of deposit	550,000	550,000
Accounts receivable	15,026	35,822
Prepaid expenses	6,363	6,032
Other receivables		
Morgan County Cooperative District	13,734	23,627
Total current assets	2,032,309	1,919,727
FIXED ASSETS, NET	2,829,013	2,927,252
DEFERRED OUTFLOWS OF RESOURCES	-	-
Total assets	$ 4,861,322	$ 4,846,979

LIABILITIES AND DEFERRED INFLOWS OF RESOURCES

CURRENT LIABILITIES	$ -	$ -
DEFERRED INFLOWS OF RESOURCES	-	-
Total liabilities	-	-

NET POSITION

Invested in capital assets, net of related debt	2,829,013	2,927,252
Unrestricted	2,032,309	1,919,727
Total net position	4,861,322	4,846,979
Total liabilities and net position	$ 4,861,322	$ 4,846,979

See accompanying notes and independent accountant's review report.

STATEMENTS OF REVENUES, EXPENSES AND CHANGES IN NET POSITION

Decatur-Morgan County Port Authority

For the years ended September 30, 2019 and 2018

	2019	2018
OPERATING REVENUES		
Rent and wharfage fees	$ 325,292	$ 353,524
TOTAL OPERATING REVENUES	325,292	353,524
OPERATING EXPENSES		
Salary and related expenses	149,129	161,284
Depreciation	103,009	103,873
Insurance	31,586	30,381
Rent	25,500	24,225
Operating supplies	15,218	18,883
Professional services	4,000	4,105
Decatur Corridor incentive expenses	5,000	5,000
Repairs and maintenance	2,086	3,848
Utilities	1,363	1,210
Other	2,636	1,488
TOTAL OPERATING EXPENSES	339,527	354,297
Operating income (loss)	(14,235)	(773)
NONOPERATING REVENUES AND EXPENSES		
Interest income	23,808	10,398
Capital contributions	4,770	-
Total nonoperating revenue	28,578	10,398
Change in net position	14,343	9,625
Net position - beginning	4,846,979	4,837,354
Net position - ending	$ 4,861,322	$ 4,846,979

See accompanying notes and independent accountant's review report.

STATEMENTS OF CASH FLOWS

Decatur-Morgan County Port Authority

For the years ended September 30, 2019 and 2018

	2019	2018
CASH FLOWS FROM OPERATING ACTIVITIES		
Receipts from customers	$ 346,088	$ 344,978
Cash paid for expenses	(236,849)	(250,523)
Net cash provided by (used in) operating activities	109,239	94,455
CASH FLOWS FROM CAPITAL AND RELATED FINANCING ACTIVITIES		
Advances/receipts of other receivables	9,893	13,004
Contribution toward fixed asset purchase	4,770	-
Purchases of fixed assets	(4,770)	(359)
Net cash provided by (used in) capital and related financing activities	9,893	12,645
CASH FLOWS FROM INVESTING ACTIVITIES		
Interest income	23,808	10,398
Net cash provided by (used in) investing activities	23,808	10,398
Net increase (decrease) in cash	142,940	117,498
Cash at beginning of year	1,304,246	1,186,748
Cash at end of year	$ 1,447,186	$ 1,304,246
Reconciliation of operating income (loss) to net cash provided by operating activities:		
Operating income (loss)	$ (14,235)	$ (773)
Adjustments to reconcile operating income (loss) to net cash provided by (used in) operating activities		
Depreciation expense	103,009	103,873
(Increase) decrease in accounts receivables	20,796	(8,546)
(Increase) decrease in prepaid expenses	(331)	(99)
Total adjustments	123,474	95,228
Net cash provided by (used in) operating activities	$ 109,239	$ 94,455

See accompanying notes and independent accountant's review report.

NOTES TO FINANCIAL STATEMENTS

Decatur-Morgan County Port Authority September 30, 2019 and 2018

Note 1: SUMMARY OF SIGNIFICANT ACCOUNTING POLICIES

Nature of Operations

The Decatur-Morgan County Port Authority (the Authority) is a non-profit public corporation incorporated April 27, 1982, under the provisions of Act Number 80-647, Chapter 94 of Title II of the Code of Alabama 1975. The purpose of the Authority is to develop any property on or near the Tennessee River in Morgan County, Alabama. The Authority operates as an enterprise fund.

Basis of Accounting and Measurement Focus

The basis of accounting is the accrual method and the measurement focus is the flow of economic resources. Revenues are recognized when earned and expenses are recognized when incurred.

Accounting Standards

The accompanying financial statements have been prepared in accordance with statements issued by the Government Accounting Standards Board (GASB).

Use of Estimates in Preparation of Financial Statements

The preparation of financial statements in conformity with accounting principles generally accepted in the United States of America requires management to make estimates and assumptions that affect certain reported amounts and disclosures. Accordingly, actual results could differ from those estimates. Useful lives and methods assigned to fixed assets is a significant estimate used in the preparation of these financial statements.

Cash and Investments

Cash and cash equivalents include demand deposits and highly liquid investments that have an original maturity date when acquired of three months or less. Certificates of deposit are non-negotiable and carried at cost, which approximates fair value. The Authority has not formally adopted a policy for types of investments permitted.

Accounts Receivable

Accounts receivable consists of amounts due from customers associated with lease of port facilities and wharfage fees. Substantially all receivables are due from customers in the Decatur, Alabama area. As of September 30, 2019, no accounts receivable were outstanding more than 90 days. Accounts receivable deemed uncollectible are written off when they are determined to be uncollectible.

Revenues and Expenses

Operating revenues and expenses consist of those revenues resulting from ongoing principal operations of the Authority. Operating revenues consist primarily of lease rentals and wharfage fees and are recognized currently as the revenue becomes due. Non-operating revenues and expenses consist of those revenues and expenses related to financing and investing types of activities and result from non-exchange transactions. When an expense is incurred for purposes for which there are both restricted and unrestricted net position available, it the policy of the Authority to apply those expenses to restricted net position to the extent available and then to unrestricted net position.

Note 2: OTHER RECEIVABLES

Other receivables consist of amounts receivable from the Morgan County Industrial Park and Economic Development Cooperative District (the District). The Authority and the District share common management and amounts due from the District were for costs associated with the District's Industrial Park development projects.

NOTES TO FINANCIAL STATEMENTS

Decatur-Morgan County Port Authority September 30, 2019 and 2018

Note 3: CONCENTRATION OF REVENUES AND RECEIVABLES

The Authority has an agreement with WATCO Transloading, LLC to maintain the Authority's ports. Under the agreement, WATCO rents facilities and collects wharfage fees on behalf of the Authority that represent a significant amount of revenue for the Authority. As of September 30, 2019 and 2018, accounts receivables associated with the agreement were $5,501 and $12,638 or 37% and 35%, respectively, of total accounts receivables. Revenues for the years ending September 30, 2019 and 2018, in rent and wharfage fees associated with this agreement were $247,317 and $264,282, which represents 75% of annual revenues from rent and wharfage fees for the Port Authority in each year.

Note 4: FIXED ASSETS

Property and equipment purchases exceeding $2,500 are capitalized at historical cost or estimated value at the date received by gift. Depreciation is computed using the straight-line method over estimated useful lives of five to forty years. The following is a summary of property and equipment activity for the year ended September 30, 2019:

	Beginning Balance	Additions	Reductions	Ending Balance
Property and buildings	$ 6,955,669	$ 4,770	$ -	$6,960,439
Land	1,311,132	-	-	1,311,132
Transportation equipment	40,917	-	-	40,917
Furniture and equipment	59,418	-	-	59,418
	8,367,136	4,770	-	8,371,906
Accumulated depreciation	(5,439,884)	(103,009)	-	(5,542,893)
Net book value	$ 2,927,252	$ (98,239)	$ -	$2,829,013

Note 5: OPERATING LEASES

Office Space: On September 3, 2002, the Authority entered into an agreement with the Morgan County Economic Development Association (EDA) to share office space under a lease entered into by the EDA. Under the agreement, the Authority agreed to pay 50% of the lease expense to share office space with the EDA. EDA's lease commenced on May 1, 2003 for a five year term with an option to extend the lease for five years, which was exercised extending the lease through May 2018. In May 2018, the lease was renewed through May 2028, with monthly rents of $4,250 through May 2023 and increasing to $4,533 for June 2023 through May 2028. The Port Authority paid rent expense associated with this lease in the amount of $25,500 and $24,225 for the years ending September 30, 2019 and 2018, respectively. Based on management's expectations that the arrangement between the Authority and EDA will continue, the Authority anticipates future minimum rental payments under the arrangement to be for years ended September 30,

2020	$ 25,500
2021	25,500
2022	25,500
2023	26,066
2024	27,204
2025 and thereafter	99,748
	$229,518

Note 6: CONTRACTS, AGREEMENTS AND RELATED PARTIES

The Authority has a long-term working relationship with the Morgan County Economic Development Association (EDA) due to the nature of the two organizations' shared purpose of promoting industrial and economic development in Morgan County. Under this relationship, the two organizations share office space, as detailed under Note 5, operating expenses and some personnel. The Authority has no employees, but reimburses EDA for a portion of the payroll expenses for certain EDA employees that provide services to the Authority. The Authority also reimburses EDA for 50% of the supplies and operating expenses incurred by EDA. The Executive Director, Vice President and Financial Affairs Administrator of the Authority serve in the same capacity for the EDA.

Economic Incentives: The Port Authority approved an agreement to fund Decatur Corridor Development, Inc., a non-profit organization whose mission is development and revitalization of Morgan County, Alabama properties. The agreement calls for payment of $25,000 over a five year period for the purpose of developing key waterfront properties in Morgan County. During the years ended September 30, 2019 and 2018, the Port Authority paid $5,000 in each year.

Note 7: CONCENTRATIONS OF CREDIT RISK

The Authority maintains cash on deposit and certificates of deposit in various financial institutions located in Morgan County, Alabama. Accounts at each financial institution are fully insured during the year by either the Federal Deposit Insurance Corporation (FDIC) or the State of Alabama SAFE Program.

Note 8: DOCK FACILITY AGREEMENTS AND LAND LEASE

On January 1, 2016, the Authority executed a ten-year lease with Kinder-Morgan Bulk Terminals, Inc., which was assigned to WATCO Transloading, LLC on October 21, 2016. The lease agreement requires the lessee to pay a monthly fixed lease rate plus wharfage fees based on an agreed-upon rate per ton of product loaded or unloaded at the dock. The lease agreement includes two five-year renewal options that may be exercised to extend the lease with wharfage rates and the fixed rate rental amount adjusted from the original agreed upon rates to new rates based on the change in the Consumer Price Index as of the renewal date.

On January 1, 2012, the Port Authority entered into a long-term agreement with Gavilon Grains, LLC for wharfage fees based on an agreed-upon rate per ton of product loaded or unloaded at the dock, but not less than $25,000 annually. The lease expires December 31, 2031 and includes four five-year renewal options after that date.

As of September 30, 2019, future minimum payments that the Port Authority will receive through these agreements are:

2020	$136,510
2021	136,510
2022	136,510
2023	136,510
2024	136,510
2025 and thereafter	209,128
	$891,678

Note 8: DOCK FACILITY AGREEMENTS AND LAND LEASE - continued

The Authority entered into a long-term land lease agreement on September 22, 2008. The lease agreement requires the lessee to pay a fixed-rate per year for a period of 20 years. The lease agreement includes six options to extend the lease for five-year terms each. The lease agreement increases the annual rent payment by a rate of 10% every five years of the original agreement, as well as a 10% increase for each of the options exercised. If the tenant subleases the land to a third party, the rent payment is increased automatically to $16,000 per year.

As of September 30, 2019, the future minimum lease payments that the Authority will receive through the agreement are:

2020	$ 121
2021	121
2022	121
2023	121
2024	133
Thereafter	533
	$1,150

Note 9: FAIR VALUE MEASUREMENTS

The Port Authority has implemented GASB Statement No. 72, *Fair Value Measurements and Application,* which defines fair value as the price that would be received to sell an asset or paid to transfer a liability in an orderly transaction between market participants at the measurement date. This statement establishes a hierarchy of valuation inputs based on the extent to which the inputs are observable in the marketplace. Inputs are used in applying the various valuation techniques and take into account the assumptions that market participants use to make valuation decisions. Inputs may include price information, credit data, interest and yield curve data, and other factors specific to the financial instrument. Observable inputs reflect market data obtained from independent sources. In contract, unobservable inputs reflect the entity's assumptions about how market participants would value the financial Instrument. Valuation techniques should maximize the use of observable inputs to the extent available.

A financial instrument's level within the fair value hierarchy is based on the lowest level of any input that is significant to the fair value measurement. The following describes the hierarchy of inputs used to measure fair value and the primary valuation methodologies used for financial instruments measured at fair value on a recurring basis:

Level 1: Investments whose values are based on quoted market prices (unadjusted) for identical assets in active markets that a government can access at the measurement date.

Level 2: Investment with inputs – other than quoted prices included within Level 1 – that are observable for an asset, either directly or indirectly.

Level 3: Investments that have unobservable inputs for an asset and may require a degree of professional judgment.

NOTES TO FINANCIAL STATEMENTS

Note 9: FAIR VALUE MEASUREMENTS - continued

As of September 30, 2019 and 2018, the Port Authority has the following investments for which fair value measurements are required to be disclosed:

	Fair Value Measurements		
	Quoted Price in Active Market for Identical Assets (Level 1)	Significant Other Observable Inputs (Level 2)	Significant Unobservable Inputs (Level 3)
Certificates of Deposit	$ -	$ 550,000	$ -

Note 10: RECLASSIFICATIONS

Certain items have been reclassified in the prior year financial statements for comparative purposes. This reclassification affects neither the net income (loss) nor the net position of the Authority.

Note 11: FUTURE PRONOUNCEMENTS

The Government Accounting Standards Board (GASB) has issued statements that will become effective in subsequent fiscal years. These statements address:

- Certain asset retirement obligations
- Fiduciary activities
- Certain debt extinguishment issues
- Leases
- Accounting for interest incurred before the end of a construction period
- Majority equity interests
- Certain conduit debt obligations

Note 12: SUBSEQUENT EVENTS

The Authority has evaluated subsequent events through January 24, 2020, the date which the financial statements were available to be issued. No events have occurred subsequent to the balance sheet date that require recognition or disclosure.

Attachment C, State of Alabama – Disclosure Statement

Attachment C

State of Alabama
Disclosure Statement

Required by Article 3B of Title 41, Code of Alabama 1975

ENTITY COMPLETING FORM
Decatur Morgan County Port Authority

ADDRESS
300 Market Street NE, Suite 2

CITY, STATE, ZIP
Decatur, AL 35601

TELEPHONE NUMBER
256-353-1213

STATE AGENCY/DEPARTMENT THAT WILL RECEIVE GOODS, SERVICES, OR IS RESPONSIBLE FOR GRANT AWARD
Alabama Department of Economic and Community Affairs (ADECA)

ADDRESS
401 Adams Avenue

CITY, STATE, ZIP
Montgomery, AL 36104

TELEPHONE NUMBER
334-242-5290

This form is provided with:

☐ Contract ☐ Proposal ☐ Request for Proposal ☐ Invitation to Bid ☑ Grant Proposal

Have you or any of your partners, divisions, or any related business units previously performed work or provided goods to any State Agency/Department in the current or last fiscal year?

☐ Yes ☑ No

If yes, identify below the State Agency/Department that received the goods or services, the type(s) of goods or services previously provided, and the amount received for the provision of such goods or services.

STATE AGENCY/DEPARTMENT	TYPE OF GOODS/SERVICES	AMOUNT RECEIVED
N/A		

Have you or any of your partners, divisions, or any related business units previously applied and received any grants from any State Agency/Department in the current or last fiscal year?

☐ Yes ☑ No

If yes, identify the State Agency/Department that awarded the grant, the date such grant was awarded, and the amount of the grant.

STATE AGENCY/DEPARTMENT	DATE GRANT AWARDED	AMOUNT OF GRANT
N/A		

1. List below the name(s) and address(es) of all public officials/public employees with whom you, members of your immediate family, or any of your employees have a family relationship and who may directly personally benefit financially from the proposed transaction. Identify the State Department/Agency for which the public officials/public employees work. (Attach additional sheets if necessary.)

NAME OF PUBLIC OFFICIAL/EMPLOYEE	ADDRESS	STATE DEPARTMENT/AGENCY
N/A		

Attachment C

2. List below the name(s) and address(es) of all family members of public officials/public employees with whom you, members of your immediate family, or any of your employees have a family relationship and who may directly personally benefit financially from the proposed transaction. Identify the public officials/public employees and State Department/Agency for which the public officials/public employees work. (Attach additional sheets if necessary.)

NAME OF FAMILY MEMBER	ADDRESS	NAME OF PUBLIC OFFICIAL/ PUBLIC EMPLOYEE	STATE DEPARTMENT/ AGENCY WHERE EMPLOYED
N/A			

If you identified individuals in items one and/or two above, describe in detail below the direct financial benefit to be gained by the public officials, public employees, and/or their family members as the result of the contract, proposal, request for proposal, invitation to bid, or grant proposal. (Attach additional sheets if necessary.)

N/A

Describe in detail below any indirect financial benefits to be gained by any public official, public employee, and/or family members of the public official or public employee as the result of the contract, proposal, request for proposal, invitation to bid, or grant proposal. (Attach additional sheets if necessary.)

N/A

List below the name(s) and address(es) of all paid consultants and/or lobbyists utilized to obtain the contract, proposal, request for proposal, invitation to bid, or grant proposal:

NAME OF PAID CONSULTANT/LOBBYIST	ADDRESS
N/A	

By signing below, I certify under oath and penalty of perjury that all statements on or attached to this form are true and correct to the best of my knowledge. I further understand that a civil penalty of ten percent (10%) of the amount of the transaction, not to exceed $10,000.00, is applied for knowingly providing incorrect or misleading information.

Signature: [signature] Date: 04/06/2020

Notary's Signature: Cindy Vinson Date: 4/6/2020 Date Notary Expires: October 14, 2020

Article 3B of Title 41, Code of Alabama 1975 requires the disclosure statement to be completed and filed with all proposals, bids, contracts, or grant proposals to the State of Alabama in excess of $5,000.

Revised: 09/2013